# LISTA DE APLICACIONES - BUYERS GUIDE

## LM1351-700

8 424073 207234

Qty: 517 Weight: 1.145

| O.E.M. | MAKE |
|---|---|
| 16 05 199 | OPEL |
| 44 06 073 37R | RENAULT |
| 44 14 029 | OPEL |
| 44 14 520 | OPEL |
| 44 233 33 | OPEL |
| 44060-00Q2E | NISSAN |
| 44060-00QAF | NISSAN |
| 6 000 620 052 | FIAT |
| 77 01 050 918 | RENAULT |
| 77 01 054 772 | NISSAN |
| 86 60 004 446 | RENAULT |
| 86 71 016 185 | RENAULT |
| 91 992 62 | VAUXHALL |
| 93 173 646 | VAUXHALL |
| 93 192 389 | VAUXHALL |
| 95 518 305 | OPEL |
| 95 599 224 | OPEL |

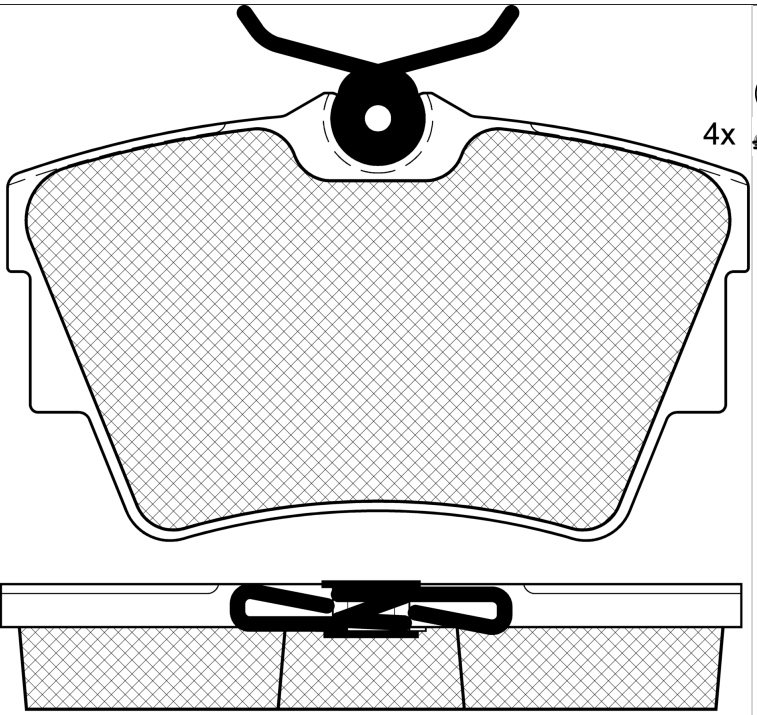


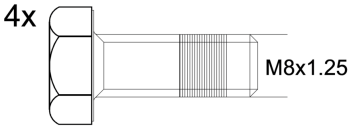


1-Ref. 690042

## LM1351-700

E 9 90R-02A1663/1352

Lucas - Girling

94.9x57.4x16

| WVA | FMSI |
|---|---|
| 23980 | D808-7681 |
| | D808-7685 |
| | D808-8843 |

| MAKE |
|---|
| FIAT |
| MITSUBISHI |
| NISSAN |
| OPEL |
| RENAULT |
| VAUXHALL |

| | | Trac. | CC | Kw | CV | | Front / Rear |
|---|---|---|---|---|---|---|---|
| **FIAT** | | | | | | | |
| **TALENTO II (296_) 06.16-** | | | | | | | **Bus (Minibus-M2-Segment)** |
| 1.6 D (R9M 413) | Diesel | FWD | 1598 | 70 | 95 | 06.16-12.21 | ■ |
| 1.6 D | Diesel | FWD | 1598 | 85 | 116 | 06.16- | ■ |
| 1.6 D | Diesel | FWD | 1598 | 88 | 120 | 06.16- | ■ |
| 1.6 D | Diesel | FWD | 1598 | 89 | 121 | 05.18-12.21 | ■ |
| 1.6 D (R9M 452) | Diesel | FWD | 1598 | 92 | 125 | 06.16-12.21 | ■ |
| 1.6 D | Diesel | FWD | 1598 | 103 | 140 | 06.16- | ■ |
| 1.6 D (R9M 452) | Diesel | FWD | 1598 | 107 | 145 | 06.16-12.21 | ■ |
| 2.0 EcoJet (M9R 710) | Diesel | FWD | 1997 | 88 | 120 | 07.19-12.21 | ■ |
| 2.0 EcoJet (M9R 710) | Diesel | FWD | 1997 | 107 | 145 | 07.19-12.21 | ■ |
| **TALENTO II (296_) 06.16-** | | | | | | | **Estate Van (LCVs-N1 Segment)** |
| 1.6 D | Diesel | FWD | 1598 | 66 | 90 | 06.16- | ■ |
| 1.6 D | Diesel | FWD | 1598 | 70 | 95 | 06.16- | ■ |
| 1.6 D | Diesel | FWD | 1598 | 85 | 115 | 06.16- | ■ |
| 1.6 D | Diesel | FWD | 1598 | 89 | 121 | 06.16- | ■ |
| 1.6 D | Diesel | FWD | 1598 | 92 | 125 | 06.16- | ■ |
| 1.6 D | Diesel | FWD | 1598 | 107 | 145 | 06.16- | ■ |
| **TALENTO II (296_) 06.16-** | | | | | | | **Platform/Chassis (LCVs-N1 Segment)** |
| 1.6 D | Diesel | FWD | 1598 | 88 | 120 | 06.16- | ■ |
| 1.6 D (R9M 413) | Diesel | FWD | 1598 | 89 | 121 | 06.16-12.21 | ■ |
| 1.6 D (R9M 452) | Diesel | FWD | 1598 | 92 | 125 | 06.16-12.21 | ■ |
| 1.6 D (R9M 452) | Diesel | FWD | 1598 | 107 | 145 | 06.16-12.21 | ■ |
| 2.0 EcoJet (M9R 710) | Diesel | FWD | 1997 | 107 | 145 | 07.19-12.21 | ■ |

| | | | | | | | |
|---|---|---|---|---|---|---|---|
| 2.0 EcoJet (M9R 710) | Diesel | FWD | 1997 | 125 | 170 | 07.19-12.21 | ■ |
| **TALENTO II (296_) 06.16-** | | | | | | **Van (LCVs-N1 Segment)** | |
| 1.6 D | Diesel | FWD | 1598 | 66 | 90 | 06.16- | ■ |
| 1.6 D (R9M 413) | Diesel | FWD | 1598 | 70 | 95 | 06.16-12.21 | ■ |
| 1.6 D (R9M 408) | Diesel | FWD | 1598 | 85 | 115 | 06.16-12.21 | ■ |
| 1.6 D (R9M 413) | Diesel | FWD | 1598 | 89 | 121 | 06.16-12.21 | ■ |
| 1.6 D (R9M 452) | Diesel | FWD | 1598 | 92 | 125 | 06.16-12.21 | ■ |
| 1.6 D (R9M 452) | Diesel | FWD | 1598 | 107 | 145 | 06.16-12.21 | ■ |
| 2.0 EcoJet (M9R 710) | Diesel | FWD | 1997 | 88 | 120 | 07.19-12.21 | ■ |
| 2.0 EcoJet (M9R 710) | Diesel | FWD | 1997 | 107 | 145 | 07.19-12.21 | ■ |
| 2.0 EcoJet (M9R 710) | Diesel | FWD | 1997 | 125 | 170 | 07.19-12.21 | ■ |
| **MITSUBISHI** | | | | | | | |
| **EXPRESS IV (SN) 02.20-** | | | | | | **Van (LCVs-N1 Segment)** | |
| 1.6 | Gasolina | FWD | 1598 | 103 | 140 | 02.20- | ■ |
| 2.0 | Gasolina | FWD | 1997 | 125 | 170 | 02.20- | ■ |
| **NISSAN** | | | | | | | |
| **(X82) 11.21-** | | | | | | **Bus ()** | |
| 2.0 dCi 110 | Diesel | FWD | 1997 | 81 | 110 | 11.21- | ■ |
| 2.0 dCi 150 | Diesel | FWD | 1997 | 110 | 150 | 11.21- | ■ |
| 2.0 dCi 170 | Diesel | FWD | 1997 | 125 | 170 | 11.21- | ■ |
| **INTERSTAR (X70) 04.02-** | | | | | | **Bus (Minibus-M2-Segment)** | |
| dCi 80 (F9Q 772) | Diesel | FWD | 1870 | 60 | 82 | 04.02-08.06 | ■ |
| dCi 80 (F9Q 774) | Diesel | FWD | 1870 | 60 | 82 | 04.02-08.06 | ■ |
| dCI 90 (G9T 722) | Diesel | FWD | 2188 | 66 | 90 | 07.02-08.06 | ■ |
| dCi 100 (G9U 720) | Diesel | FWD | 2463 | 73 | 99 | 11.03-03.06 | ■ |
| dCi 100 (G9U 754) | Diesel | FWD | 2463 | 73 | 99 | 11.03-03.06 | ■ |
| dCi 100 (G9U 650) | Diesel | FWD | 2463 | 74 | 101 | 04.06-03.11 | ■ |
| dCi 115 (G9U 724) | Diesel | FWD | 2463 | 84 | 115 | 04.02-08.06 | ■ |
| dCi 115 (G9U 750) | Diesel | FWD | 2463 | 84 | 115 | 04.02-08.06 | ■ |
| dCi 115 (G9U 754) | Diesel | FWD | 2463 | 84 | 115 | 04.02-08.06 | ■ |
| dCi 120 (G9U 650) | Diesel | FWD | 2463 | 88 | 120 | 09.06-03.11 | ■ |
| dCi 150 (G9U 632) | Diesel | FWD | 2463 | 107 | 145 | 09.06-03.11 | ■ |
| dCi 140 (ZD30) | Diesel | FWD | 2953 | 100 | 136 | 11.03- | ■ |
| **INTERSTAR (X70) 08.03-** | | | | | | **Platform/Chassis (LCVs-N1 Segment)** | |
| dCi 100 (G9U 720) | Diesel | FWD | 2463 | 73 | 99 | 02.04- | ■ |
| dCi 100 (G9U 754) | Diesel | FWD | 2463 | 73 | 99 | 02.04- | ■ |
| dCi 115 (G9U 720) | Diesel | FWD | 2463 | 84 | 115 | 08.03- | ■ |
| dCi 115 (G9U 724) | Diesel | FWD | 2463 | 84 | 115 | 08.03- | ■ |
| dCi 115 (G9U 750) | Diesel | FWD | 2463 | 84 | 115 | 08.03- | ■ |
| dCi 115 (G9U 754) | Diesel | FWD | 2463 | 84 | 115 | 08.03- | ■ |
| dCi 120 (G9U 650) | Diesel | FWD | 2463 | 88 | 120 | 08.06- | ■ |
| dCi 150 (G9U 632) | Diesel | FWD | 2463 | 107 | 145 | 08.06- | ■ |
| dCi 140 (ZD30) | Diesel | FWD | 2953 | 100 | 136 | 11.03- | ■ |
| **INTERSTAR (X70) 04.02-** | | | | | | **Van (LCVs-N1 Segment)** | |
| dCi 80 (F9Q 772) | Diesel | FWD | 1870 | 60 | 82 | 04.02-08.06 | ■ |
| dCi 80 (F9Q 774) | Diesel | FWD | 1870 | 60 | 82 | 04.02-08.06 | ■ |
| dCI 90 (G9T 722) | Diesel | FWD | 2188 | 66 | 90 | 07.02- | ■ |
| dCi 100 (G9U 720) | Diesel | FWD | 2463 | 73 | 99 | 11.03-03.06 | ■ |
| dCi 100 (G9U 754) | Diesel | FWD | 2463 | 73 | 99 | 11.03-03.06 | ■ |

| | | | | | | | |
|---|---|---|---|---|---|---|---|
| dCi 100 (G9U 720) | Diesel | FWD | 2463 | 74 | 101 | 04.06- | ■ |
| dCi 100 (G9U 754) | Diesel | FWD | 2463 | 74 | 101 | 04.06- | ■ |
| dCi 115 (G9U 720) | Diesel | FWD | 2463 | 84 | 115 | 04.02- | ■ |
| dCi 115 (G9U 724) | Diesel | FWD | 2463 | 84 | 115 | 04.02- | ■ |
| dCi 115 (G9U 750) | Diesel | FWD | 2463 | 84 | 115 | 04.02- | ■ |
| dCi 115 (G9U 754) | Diesel | FWD | 2463 | 84 | 115 | 04.02- | ■ |
| dCi 120 (G9U 650) | Diesel | FWD | 2463 | 88 | 120 | 09.06- | ■ |
| dCi 150 (G9U 632) | Diesel | FWD | 2463 | 107 | 145 | 09.06- | ■ |
| dCi 140 (ZD30) | Diesel | FWD | 2953 | 100 | 136 | 11.03- | ■ |
| **NV300 (X82) 09.16-** | | | | | | **Bus (Minibus-M2-Segment)** | |
| 1.6 dci 95 (R9M 413) | Diesel | FWD | 1598 | 70 | 95 | 09.16- | ■ |
| 1.6 dci 120 (R9M 413) | Diesel | FWD | 1598 | 89 | 121 | 09.16- | ■ |
| 1.6 dci 125 (R9M 452) | Diesel | FWD | 1598 | 92 | 125 | 09.16- | ■ |
| 1.6 dci 145 (R9M 452) | Diesel | FWD | 1598 | 107 | 145 | 09.16- | ■ |
| 2.0 dCi 110 | Diesel | FWD | 1997 | 81 | 110 | 05.21- | ■ |
| 2.0 dCi 120 (M9R 710) | Diesel | FWD | 1997 | 88 | 120 | 07.19- | ■ |
| 2.0 dCi 145 (M9R 710) | Diesel | FWD | 1997 | 107 | 145 | 07.19- | ■ |
| 2.0 dCi 150 | Diesel | FWD | 1997 | 110 | 150 | 05.21- | ■ |
| 2.0 dCi 170 (M9R 710) | Diesel | FWD | 1997 | 125 | 170 | 07.19- | ■ |
| **NV300 (X82) 09.16-** | | | | | | **Platform/Chassis (LCVs-N1 Segment)** | |
| 1.6 dci 125 (R9M 452) | Diesel | FWD | 1598 | 92 | 125 | 09.16- | ■ |
| 1.6 dci 145 (R9M 452) | Diesel | FWD | 1598 | 107 | 146 | 09.16- | ■ |
| 2.0 dCi 145 (M9R 710) | Diesel | FWD | 1997 | 107 | 145 | 07.19- | ■ |
| 2.0 dCi 170 (M9R 710) | Diesel | FWD | 1997 | 125 | 170 | 07.19- | ■ |
| **NV300 (X82) 09.16-** | | | | | | **Van (LCVs-N1 Segment)** | |
| 1.6 dci 95 (R9M 413) | Diesel | FWD | 1598 | 70 | 95 | 09.16- | ■ |
| 1.6 dci 95 (R9M 415) | Diesel | FWD | 1598 | 70 | 95 | 09.16- | ■ |
| 1.6 dci 120 (R9M 413) | Diesel | FWD | 1598 | 89 | 121 | 09.16- | ■ |
| 1.6 dci 125 (R9M 452) | Diesel | FWD | 1598 | 92 | 125 | 09.16- | ■ |
| 1.6 dci 145 (R9M 452) | Diesel | FWD | 1598 | 107 | 146 | 09.16- | ■ |
| 2.0 dCi 110 | Diesel | FWD | 1997 | 81 | 110 | 05.21- | ■ |
| 2.0 dCi 120 (M9R 710) | Diesel | FWD | 1997 | 88 | 120 | 07.19- | ■ |
| 2.0 dCi 145 (M9R 710) | Diesel | FWD | 1997 | 107 | 145 | 07.19- | ■ |
| 2.0 dCi 150 | Diesel | FWD | 1997 | 110 | 150 | 05.21- | ■ |
| 2.0 dCi 170 (M9R 710) | Diesel | FWD | 1997 | 125 | 170 | 07.19- | ■ |
| **PRIMASTAR II (X83) 03.01-** | | | | | | **Bus (Minibus-M2-Segment)** | |
| 2.0 (F4R 820) | Gasolina | FWD | 1998 | 86 | 117 | 04.06- | ■ |
| 2.0 (F4R 720) | Gasolina | FWD | 1998 | 88 | 120 | 03.01-08.06 | ■ |
| 2.0 (F4R 722) | Gasolina | FWD | 1998 | 88 | 120 | 03.01-08.06 | ■ |
| dCi 80 (F9Q 762) | Diesel | FWD | 1870 | 60 | 80 | 03.01- | ■ |
| dCi 100 (F9Q 760) | Diesel | FWD | 1870 | 74 | 101 | 03.01- | ■ |
| dCI 90 (M9R 630) | Diesel | FWD | 1995 | 66 | 90 | 09.06- | ■ |
| dCI 90 (M9R 692) | Diesel | FWD | 1995 | 66 | 90 | 09.06- | ■ |
| dCI 90 (M9R 782) | Diesel | FWD | 1995 | 66 | 90 | 09.06- | ■ |
| dCI 90 (M9R 786) | Diesel | FWD | 1995 | 66 | 90 | 09.06- | ■ |
| dCi 120 (M9R 630) | Diesel | FWD | 1995 | 84 | 114 | 09.06- | ■ |
| dCi 120 (M9R 692) | Diesel | FWD | 1995 | 84 | 114 | 09.06- | ■ |
| dCi 120 (M9R 780) | Diesel | FWD | 1995 | 84 | 114 | 09.06- | ■ |
| dCi 120 (M9R 786) | Diesel | FWD | 1995 | 84 | 114 | 09.06- | ■ |
| dCi 115 (G9U 630) | Diesel | FWD | 2463 | 84 | 114 | 09.08- | ■ |

| | | | | | | | |
|---|---|---|---|---|---|---|---|
| dCi 140 (G9U 730) | Diesel | FWD | 2463 | 99 | 135 | 07.03- | ■ |
| dCi 150 (G9U 632) | Diesel | FWD | 2463 | 107 | 145 | 09.06- | ■ |
| **PRIMASTAR II (X83) 09.02-** | | | | | | **Van (LCVs-N1 Segment)** | |
| 2.0 (F4R 820) | Gasolina | FWD | 1998 | 86 | 117 | 04.06- | ■ |
| 2.0 (F4R 720) | Gasolina | FWD | 1998 | 88 | 120 | 02.03- | ■ |
| 1.9 dCi 80 (F9Q 762) | Diesel | FWD | 1870 | 60 | 82 | 09.02- | ■ |
| 1.9 dCi 100 (F9Q 760) | Diesel | FWD | 1870 | 74 | 100 | 09.02- | ■ |
| 2.0 dCi 90 (M9R 630) | Diesel | FWD | 1995 | 66 | 90 | 09.06- | ■ |
| 2.0 dCi 90 (M9R 692) | Diesel | FWD | 1995 | 66 | 90 | 09.06- | ■ |
| 2.0 dCi 90 (M9R 782) | Diesel | FWD | 1995 | 66 | 90 | 09.06- | ■ |
| 2.0 dCi 90 (M9R 786) | Diesel | FWD | 1995 | 66 | 90 | 09.06- | ■ |
| 2.0 dCi 115 (M9R 630) | Diesel | FWD | 1995 | 84 | 114 | 09.06- | ■ |
| 2.0 dCi 115 (M9R 692) | Diesel | FWD | 1995 | 84 | 114 | 09.06- | ■ |
| 2.0 dCi 115 (M9R 780) | Diesel | FWD | 1995 | 84 | 114 | 09.06- | ■ |
| 2.0 dCi 115 (M9R 786) | Diesel | FWD | 1995 | 84 | 114 | 09.06- | ■ |
| 2.5 dCi 115 (G9U 630) | Diesel | FWD | 2463 | 84 | 114 | 09.08- | ■ |
| 2.5 dCi 140 (G9U 730) | Diesel | FWD | 2463 | 99 | 135 | 07.03- | ■ |
| 2.5 dCi 150 (G9U 632) | Diesel | FWD | 2463 | 107 | 145 | 09.06- | ■ |
| **PRIMASTAR III (X82) 11.21-** | | | | | | **Van (LCVs-N1 Segment)** | |
| 2.0 dCi 110 | Diesel | FWD | 1997 | 81 | 110 | 11.21- | ■ |
| 2.0 dCi 130 | Diesel | FWD | 1997 | 96 | 131 | 11.21- | ■ |
| 2.0 dCi 150 | Diesel | FWD | 1997 | 110 | 150 | 11.21- | ■ |
| 2.0 dCi 170 | Diesel | FWD | 1997 | 125 | 170 | 11.21- | ■ |
| **PRIMASTER (X83) 07.02-08.06** | | | | | | **Platform/Chassis (LCVs-N1 Segment)** | |
| 2.0 (F4R 720) | Gasolina | FWD | 1998 | 88 | 120 | 07.02-08.06 | ■ |
| 1.9 dCi 80 | Diesel | FWD | 1870 | 60 | 82 | 07.02-08.06 | ■ |
| 1.9 dCi 100 (F9Q 760) | Diesel | FWD | 1870 | 74 | 101 | 07.02-08.06 | ■ |
| 2.5 dCi 140 | Diesel | FWD | 2463 | 99 | 135 | 07.02-08.06 | ■ |
| 2.5 dCi 150 (G9U 630) | Diesel | FWD | 2463 | 107 | 146 | 04.06- | ■ |
| **OPEL** | | | | | | | |
| **VIVARO (A) (X83) 08.01-** | | | | | | **Bus (Minibus-M2-Segment)** | |
| 2.0 ECOTEC (F7, A07, J7) (F4R 820) | Gasolina | FWD | 1998 | 86 | 117 | 08.06-07.14 | ■ |
| 2.0 16V (F7, J7, A07) (F4R 720) | Gasolina | FWD | 1998 | 88 | 120 | 08.01-07.06 | ■ |
| 1.9 DI (F7, J7, A07) (F9Q 762) | Diesel | FWD | 1870 | 60 | 80 | 08.01-07.06 | ■ |
| 1.9 DTI (F7, J7, A07) (F9Q 760) | Diesel | FWD | 1870 | 74 | 101 | 08.01-07.14 | ■ |
| 2.0 CDTI (F7, J7, A07) (M9R 780) | Diesel | FWD | 1995 | 66 | 90 | 08.06-07.14 | ■ |
| 2.0 CDTI (F7, J7, A07) (M9R 782) | Diesel | FWD | 1995 | 66 | 90 | 08.06-07.14 | ■ |
| 2.0 CDTI (F7, J7, A07) (M9R 786) | Diesel | FWD | 1995 | 66 | 90 | 08.06-07.14 | ■ |
| 2.0 CDTI (F7, J7, A07) (M9R 630) | Diesel | FWD | 1995 | 84 | 114 | 08.06-07.14 | ■ |
| 2.0 CDTI (F7, J7, A07) (M9R 692) | Diesel | FWD | 1995 | 84 | 114 | 08.06-07.14 | ■ |
| 2.0 CDTI (F7, J7, A07) (M9R 780) | Diesel | FWD | 1995 | 84 | 114 | 08.06-07.14 | ■ |
| 2.0 CDTI (F7, J7, A07) (M9R 784) | Diesel | FWD | 1995 | 84 | 114 | 08.06-07.14 | ■ |
| 2.0 CDTI (F7, J7, A07) (M9R 786) | Diesel | FWD | 1995 | 84 | 114 | 08.06-07.14 | ■ |
| 2.0 CDTI (F7, J7, A07) (M9R 788) | Diesel | FWD | 1995 | 84 | 114 | 08.06-07.14 | ■ |
| 2.5 DTI (F7, J7, A07) (G9U 730) | Diesel | FWD | 2463 | 99 | 135 | 04.03-03.10 | ■ |
| 2.5 CDTI (F7, J7, A07) (G9U 630) | Diesel | FWD | 2463 | 107 | 146 | 08.06-07.14 | ■ |
| 2.5 CDTI (F7, J7, A07) (G9U 630) | Diesel | FWD | 2464 | 84 | 114 | 08.06-03.10 | ■ |
| **VIVARO (A) (X83) 02.01-07.14** | | | | | | **Platform/Chassis (LCVs-N1 Segment)** | |
| 2.0 ECOTEC (F4R 820) | Gasolina | FWD | 1998 | 86 | 117 | 08.06-07.14 | ■ |

| | | | | | | | |
|---|---|---|---|---|---|---|---|
| 2.0 16V (F4R 720) | Gasolina | FWD | 1998 | 88 | 120 | 01.02-07.06 | ■ |
| 1.9 Di (F9Q 762) | Diesel | FWD | 1870 | 60 | 82 | 08.01-07.14 | ■ |
| 1.9 DTI (F9Q 760) | Diesel | FWD | 1870 | 74 | 101 | 02.01-12.10 | ■ |
| 2.0 CDTi (M9R 630) | Diesel | FWD | 1995 | 66 | 90 | 01.06-07.14 | ■ |
| 2.0 CDTi (M9R 780) | Diesel | FWD | 1995 | 66 | 90 | 01.06-07.14 | ■ |
| 2.0 CDTi (M9R 782) | Diesel | FWD | 1995 | 66 | 90 | 01.06-07.14 | ■ |
| 2.0 CDTi (M9R 786) | Diesel | FWD | 1995 | 66 | 90 | 01.06-07.14 | ■ |
| 2.0 CDTi (M9R 630) | Diesel | FWD | 1995 | 84 | 114 | 08.06-07.14 | ■ |
| 2.0 CDTi (M9R 780) | Diesel | FWD | 1995 | 84 | 114 | 08.06-07.14 | ■ |
| 2.5 DTi (G9U 730) | Diesel | FWD | 2463 | 99 | 135 | 04.03-03.10 | ■ |
| 2.5 CDTI (G9U 630) | Diesel | FWD | 2463 | 107 | 146 | 08.06-07.14 | ■ |
| 2.5 CDTI (G9U 630) | Diesel | FWD | 2464 | 84 | 114 | 08.06-03.10 | ■ |
| **VIVARO (A) (X83) 08.01-** | | | | | | **Van (LCVs-N1 Segment)** | |
| 2.0 ECOTEC (F7) (F4R 820) | Gasolina | FWD | 1998 | 86 | 117 | 08.06-07.14 | ■ |
| 2.0 16V (F7) (F4R 720) | Gasolina | FWD | 1998 | 88 | 120 | 08.01-07.06 | ■ |
| 1.9 DI (F7) (F9Q 762) | Diesel | FWD | 1870 | 60 | 80 | 08.01-07.06 | ■ |
| 1.9 DTI (F7) (F9Q 760) | Diesel | FWD | 1870 | 74 | 101 | 08.01-07.14 | ■ |
| 2.0 CDTI (F7) (M9R 630) | Diesel | FWD | 1995 | 66 | 90 | 08.06-07.14 | ■ |
| 2.0 CDTI (F7) (M9R 780) | Diesel | FWD | 1995 | 66 | 90 | 08.06-07.14 | ■ |
| 2.0 CDTI (F7) (M9R 782) | Diesel | FWD | 1995 | 66 | 90 | 08.06-07.14 | ■ |
| 2.0 CDTI (F7) (M9R 786) | Diesel | FWD | 1995 | 66 | 90 | 08.06-07.14 | ■ |
| 2.0 CDTI (F7) (M9R 630) | Diesel | FWD | 1995 | 84 | 114 | 08.06-07.14 | ■ |
| 2.0 CDTI (F7) (M9R 692) | Diesel | FWD | 1995 | 84 | 114 | 08.06-07.14 | ■ |
| 2.0 CDTI (F7) (M9R 780) | Diesel | FWD | 1995 | 84 | 114 | 08.06-07.14 | ■ |
| 2.0 CDTI (F7) (M9R 784) | Diesel | FWD | 1995 | 84 | 114 | 08.06-07.14 | ■ |
| 2.0 CDTI (F7) (M9R 786) | Diesel | FWD | 1995 | 84 | 114 | 08.06-07.14 | ■ |
| 2.0 CDTI (F7) (M9R 788) | Diesel | FWD | 1995 | 84 | 114 | 08.06-07.14 | ■ |
| 2.5 DTI (F7) (G9U 730) | Diesel | FWD | 2463 | 99 | 135 | 04.03-03.10 | ■ |
| 2.5 CDTI (F7) (G9MB6) | Diesel | FWD | 2463 | 107 | 146 | 08.06-07.14 | ■ |
| 2.5 CDTI (F7) (G9U 630) | Diesel | FWD | 2463 | 107 | 146 | 08.06-07.14 | ■ |
| 2.5 CDTI (F7) (G9U 630) | Diesel | FWD | 2464 | 84 | 114 | 08.06-03.10 | ■ |
| **VIVARO II (B) (X82) 06.14-** | | | | | | **Bus (Minibus-M2-Segment)** | |
| 1.6 CDTI (06) (R9M 408) | Diesel | FWD | 1598 | 66 | 90 | 06.14-12.16 | ■ |
| 1.6 CDTI (06) (R9M 413) | Diesel | FWD | 1598 | 70 | 95 | 04.15-12.19 | ■ |
| 1.6 CDTI (06) (R9M 408) | Diesel | FWD | 1598 | 85 | 116 | 06.14-12.16 | ■ |
| 1.6 CDTI (06) (R9M 450) | Diesel | FWD | 1598 | 85 | 116 | 06.14-12.16 | ■ |
| 1.6 CDTI (06) (R9M 450) | Diesel | FWD | 1598 | 88 | 120 | 06.14-12.19 | ■ |
| 1.6 CDTI (06) | Diesel | FWD | 1598 | 89 | 121 | 01.19-12.19 | ■ |
| 1.6 CDTI (06) (R9M 452) | Diesel | FWD | 1598 | 92 | 125 | 04.15-12.19 | ■ |
| 1.6 CDTI (06) (R9M 450) | Diesel | FWD | 1598 | 103 | 140 | 06.14-12.16 | ■ |
| 1.6 CDTI (06) (R9M 452) | Diesel | FWD | 1598 | 107 | 145 | 04.15-12.19 | ■ |
| **VIVARO II (B) (X82) 06.14-** | | | | | | **Platform/Chassis (LCVs-N1 Segment)** | |
| 1.6 CDTI (03) | Diesel | FWD | 1598 | 66 | 90 | 06.14- | ■ |
| 1.6 CDTI (03) (R9M 408) | Diesel | FWD | 1598 | 85 | 116 | 06.14-12.16 | ■ |
| 1.6 CDTI (03) (R9M 450) | Diesel | FWD | 1598 | 85 | 116 | 06.14-12.16 | ■ |
| 1.6 CDTI (03) (R9M 450) | Diesel | FWD | 1598 | 88 | 120 | 08.15-12.19 | ■ |
| 1.6 CDTI (03) (R9M 452) | Diesel | FWD | 1598 | 92 | 125 | 11.16-12.19 | ■ |
| 1.6 CDTI (03) (R9M 450) | Diesel | FWD | 1598 | 103 | 140 | 08.15-12.16 | ■ |
| 1.6 CDTI (03) (R9M 452) | Diesel | FWD | 1598 | 107 | 146 | 11.16-12.19 | ■ |

| VIVARO II (B) (X82) 06.14- | | | | | | | Van (LCVs-N1 Segment) |
|---|---|---|---|---|---|---|---|
| 1.6 CDTI (05) (R9M 408) | Diesel | FWD | 1598 | 66 | 90 | 06.14-12.16 | ■ |
| 1.6 CDTI (05) (R9M 413) | Diesel | FWD | 1598 | 70 | 95 | 03.16-12.19 | ■ |
| 1.6 CDTI (05) (R9M 408) | Diesel | FWD | 1598 | 85 | 116 | 06.14-12.16 | ■ |
| 1.6 CDTI (05) (R9M 450) | Diesel | FWD | 1598 | 85 | 116 | 06.14-12.16 | ■ |
| 1.6 CDTI (05) (R9M 450) | Diesel | FWD | 1598 | 88 | 120 | 06.14-12.19 | ■ |
| 1.6 CDTI (05) (R9M 413) | Diesel | FWD | 1598 | 89 | 121 | 03.16-12.19 | ■ |
| 1.6 CDTI (05) (R9M 452) | Diesel | FWD | 1598 | 92 | 125 | 03.16-12.19 | ■ |
| 1.6 CDTI (05) (R9M 450) | Diesel | FWD | 1598 | 103 | 140 | 06.14-12.16 | ■ |
| 1.6 CDTI (05) (R9M 452) | Diesel | FWD | 1598 | 107 | 146 | 03.16-12.19 | ■ |
| **RENAULT** | | | | | | | |
| **TRAFIC II (JL) 03.01-** | | | | | | | **Bus (Minibus-M2-Segment)** |
| 2.0 16V (JL02, JL0L, JL0W, JL0N) (F4R 820) | Gasolina | FWD | 1998 | 86 | 117 | 08.06- | ■ |
| 2.0 (JL0A, JL0G) (F4R 720) | Gasolina | FWD | 1998 | 88 | 120 | 03.01- | ■ |
| 2.0 (JL0A, JL0G) (F4R 722) | Gasolina | FWD | 1998 | 88 | 120 | 03.01- | ■ |
| 1.9 dCi (JL0B) (F9Q 762) | Diesel | FWD | 1870 | 59 | 80 | 04.01-07.03 | ■ |
| 1.9 dCI 80 (JL0B) (F9Q 762) | Diesel | FWD | 1870 | 60 | 82 | 03.01-10.06 | ■ |
| 1.9 dCI 100 (JL0C, JL0K) (F9Q 760) | Diesel | FWD | 1870 | 74 | 101 | 03.01-10.06 | ■ |
| 2.0 dCi 90 (JL00, JL01, JL0H, JL0M, JL0P, JL0S) (M9R 630) | Diesel | FWD | 1995 | 66 | 90 | 08.06- | ■ |
| 2.0 dCi 90 (JL00, JL01, JL0H, JL0M, JL0P, JL0S) (M9R 780) | Diesel | FWD | 1995 | 66 | 90 | 08.06- | ■ |
| 2.0 dCi 90 (JL00, JL01, JL0H, JL0M, JL0P, JL0S) (M9R 782) | Diesel | FWD | 1995 | 66 | 90 | 08.06- | ■ |
| 2.0 dCi 90 (JL00, JL01, JL0H, JL0M, JL0P, JL0S) (M9R 786) | Diesel | FWD | 1995 | 66 | 90 | 08.06- | ■ |
| 2.0 dCi 115 (JL00, JL01, JL0H, JL0M, JL0U) (M9R 692) | Diesel | FWD | 1995 | 84 | 114 | 08.06- | ■ |
| 2.0 dCi 115 (JL00, JL01, JL0H, JL0M, JL0U) (M9R 780) | Diesel | FWD | 1995 | 84 | 114 | 08.06- | ■ |
| 2.0 dCi 115 (JL00, JL01, JL0H, JL0M, JL0U) (M9R 782) | Diesel | FWD | 1995 | 84 | 114 | 08.06- | ■ |
| 2.0 dCi 115 (JL00, JL01, JL0H, JL0M, JL0U) (M9R 786) | Diesel | FWD | 1995 | 84 | 114 | 08.06- | ■ |
| 2.5 dCi 115 (JL0R, JL0V) (G9U 630) | Diesel | FWD | 2463 | 84 | 114 | 02.08- | ■ |
| 2.5 dCi 135 (JL0D) (G9U 730) | Diesel | FWD | 2463 | 99 | 135 | 05.03-10.06 | ■ |
| 2.5 DTi | Diesel | RWD | 2463 | 99 | 135 | 03.03-07.03 | ■ |
| 2.5 dCi 145 (JL0J) (G9U 630) | Diesel | FWD | 2463 | 107 | 146 | 08.06- | ■ |
| **TRAFIC II (EL) 03.01-** | | | | | | | **Platform/Chassis (LCVs-N1 Segment)** |
| 2.0 16V (EL0L) (F4R 820) | Gasolina | FWD | 1998 | 86 | 117 | 08.06-12.14 | ■ |
| 2.0 (EL0A) (F4R 720) | Gasolina | FWD | 1998 | 88 | 120 | 03.01-10.06 | ■ |
| 1.9 dCi (EL0B) (F9Q 762) | Diesel | FWD | 1870 | 59 | 80 | 09.01-07.03 | ■ |
| 1.9 dCi 80 (EL0B) (F9Q 762) | Diesel | FWD | 1870 | 60 | 82 | 03.01-10.06 | ■ |
| 1.9 dCi 100 (EL0C) (F9Q 760) | Diesel | FWD | 1870 | 74 | 101 | 03.01-10.06 | ■ |
| 2.0 dCi 90 (EL0H, EL00, EL01, EL0M, EL0P, EL0S) (M9R 780) | Diesel | FWD | 1995 | 66 | 90 | 08.06- | ■ |
| 2.0 dCi 90 (EL0H, EL00, EL01, EL0M, EL0P, EL0S) (M9R 782) | Diesel | FWD | 1995 | 66 | 90 | 08.06- | ■ |
| 2.0 dCi 115 (EL0H, EL00, EL01, EL0M) (M9R 692) | Diesel | FWD | 1995 | 84 | 114 | 08.06- | ■ |
| 2.0 dCi 115 (EL0H, EL00, EL01, EL0M) (M9R 780) | Diesel | FWD | 1995 | 84 | 114 | 08.06- | ■ |
| 2.0 dCi 115 (EL0H, EL00, EL01, EL0M) (M9R 782) | Diesel | FWD | 1995 | 84 | 114 | 08.06- | ■ |
| 2.0 dCi 115 (EL0H, EL00, EL01, EL0M) (M9R 786) | Diesel | FWD | 1995 | 84 | 114 | 08.06- | ■ |
| 2.5 dCi (EL0R, EL0V) (G9U 630) | Diesel | FWD | 2463 | 84 | 114 | 08.07- | ■ |
| 2.5 dCi 135 (EL0D) (G9U 730) | Diesel | FWD | 2463 | 99 | 135 | 03.01-10.06 | ■ |

| | | | | | | | |
|---|---|---|---|---|---|---|---|
| 2.5 dCi 145 (EL0J) (G9U 630) | Diesel | FWD | 2463 | 107 | 146 | 08.06- | ■ |
| **TRAFIC II (FL) 03.01-** | | | | | | **Van (LCVs-N1 Segment)** | |
| 2.0 16V (FL0L, FL0N, FL0W, FL02) (F4R 820) | Gasolina | FWD | 1998 | 86 | 117 | 08.06- | ■ |
| 2.0 (FL0A, FL0G) (F4R 720) | Gasolina | FWD | 1998 | 88 | 120 | 03.01- | ■ |
| 2.0 (FL0A, FL0G) (F4R 722) | Gasolina | FWD | 1998 | 88 | 120 | 03.01- | ■ |
| 1.9 dCi (FL0B) (F9Q 762) | Diesel | FWD | 1870 | 59 | 80 | 04.01-07.03 | ■ |
| 1.9 dCi 80 (FL0B) (F9Q 760) | Diesel | FWD | 1870 | 60 | 82 | 03.01-10.06 | ■ |
| 1.9 dCi 80 (FL0B) (F9Q 762) | Diesel | FWD | 1870 | 60 | 82 | 03.01-10.06 | ■ |
| 1.9 dCi 100 (FL0C, FL0K, FL0B) (F9Q 760) | Diesel | FWD | 1870 | 74 | 101 | 03.01-10.06 | ■ |
| 1.9 dCi (FL0C) (F9Q 760) | Diesel | FWD | 1870 | 75 | 102 | 01.06-12.14 | ■ |
| 2.0 dCi 90 (FL0H, FL00, FL01, FL0M, FL0P, FL0S) (M9R 630) | Diesel | FWD | 1995 | 66 | 90 | 08.06- | ■ |
| 2.0 dCi 90 (FL0H, FL00, FL01, FL0M, FL0P, FL0S) (M9R 780) | Diesel | FWD | 1995 | 66 | 90 | 08.06- | ■ |
| 2.0 dCi 90 (FL0H, FL00, FL01, FL0M, FL0P, FL0S) (M9R 782) | Diesel | FWD | 1995 | 66 | 90 | 08.06- | ■ |
| 2.0 dCi 90 (FL0H, FL00, FL01, FL0M, FL0P, FL0S) (M9R 786) | Diesel | FWD | 1995 | 66 | 90 | 08.06- | ■ |
| 2.0 dCi 115 (FL01, FL0U, FL00, FL0H, FL0M) (M9R 692) | Diesel | FWD | 1995 | 84 | 114 | 08.06- | ■ |
| 2.0 dCi 115 (FL01, FL0U, FL00, FL0H, FL0M) (M9R 780) | Diesel | FWD | 1995 | 84 | 114 | 08.06- | ■ |
| 2.0 dCi 115 (FL01, FL0U, FL00, FL0H, FL0M) (M9R 782) | Diesel | FWD | 1995 | 84 | 114 | 08.06- | ■ |
| 2.0 dCi 115 (FL01, FL0U, FL00, FL0H, FL0M) (M9R 786) | Diesel | FWD | 1995 | 84 | 114 | 08.06- | ■ |
| 2.5 dCi (FL0R, FL0V) (G9U 630) | Diesel | FWD | 2463 | 84 | 114 | 08.07- | ■ |
| 2.5 dCi 135 (FL0D) (G9U 730) | Diesel | FWD | 2463 | 99 | 135 | 05.03-10.06 | ■ |
| 2.5 DTi (G9U 730) | Diesel | FWD | 2463 | 99 | 135 | 03.03-07.03 | ■ |
| 2.5 dCi 145 (FL0J) (G9U 630) | Diesel | FWD | 2463 | 107 | 146 | 08.06- | ■ |
| **TRAFIC III (JG_) 05.14-** | | | | | | **Bus (Minibus-M2-Segment)** | |
| 1.6 dCi 90 (JGME) (R9M 408) | Diesel | FWD | 1598 | 66 | 90 | 05.14- | ■ |
| 1.6 dCi 95 (JGMR, JGMJ) (R9M 413) | Diesel | FWD | 1598 | 70 | 95 | 07.15- | ■ |
| 1.6 dCi 95 (JGMR, JGMJ) (R9M 415) | Diesel | FWD | 1598 | 70 | 95 | 07.15- | ■ |
| 1.6 dCi 115 (JGMD) (R9M 408) | Diesel | FWD | 1598 | 85 | 116 | 05.14- | ■ |
| 1.6 dCi 120 (JGMB) (R9M 450) | Diesel | FWD | 1598 | 88 | 120 | 05.14- | ■ |
| 1.6 dCi 120 (JGMS) (R9M 415) | Diesel | FWD | 1598 | 89 | 121 | 01.19- | ■ |
| 1.6 dCi 125 (JGMH) (R9M 452) | Diesel | FWD | 1598 | 92 | 125 | 07.15- | ■ |
| 1.6 dCi 140 (JGMA) (R9M 450) | Diesel | FWD | 1598 | 103 | 140 | 05.14- | ■ |
| 1.6 dCi 145 (JGMG) (R9M 452) | Diesel | FWD | 1598 | 107 | 145 | 07.15- | ■ |
| 2.0 dCi 110 (JGMW) | Diesel | FWD | 1997 | 81 | 110 | 05.21- | ■ |
| 2.0 dCi 120 (JGMN) (M9R 710) | Diesel | FWD | 1997 | 88 | 120 | 06.19- | ■ |
| 2.0 dCi 145 (JGML) (M9R 710) | Diesel | FWD | 1997 | 107 | 145 | 06.19- | ■ |
| 2.0 dCi 150 (JGMU) | Diesel | FWD | 1997 | 110 | 150 | 05.21- | ■ |
| 2.0 dCi 170 (JGMM, JGMV) (M9R 710) | Diesel | FWD | 1997 | 125 | 170 | 06.19- | ■ |
| **TRAFIC III (EG_) 05.14-** | | | | | | **Platform/Chassis (LCVs-N1 Segment)** | |
| E-Tech Electric (EGJA) | Eléctrico | FWD | | 90 | 122 | 05.23- | ■ |
| 1.6 dCi 90 | Diesel | FWD | 1598 | 66 | 90 | 05.14- | ■ |
| 1.6 dCi 120 (EGMB) (R9M 450) | Diesel | FWD | 1598 | 88 | 120 | 06.14- | ■ |
| 1.6 dCi 125 (EGMH) (R9M 452) | Diesel | FWD | 1598 | 92 | 125 | 07.15- | ■ |
| 1.6 dCi 140 (EGMA) (R9M 450) | Diesel | FWD | 1598 | 103 | 140 | 06.14- | ■ |
| 1.6 dCi 145 (EGMG) (R9M 452) | Diesel | FWD | 1598 | 107 | 145 | 07.15- | ■ |
| 2.0 dCi 145 (EGML) (M9R 710) | Diesel | FWD | 1997 | 107 | 145 | 06.19- | ■ |
| 2.0 dCi 150 (EGMU) | Diesel | FWD | 1997 | 110 | 150 | 08.21- | ■ |

| | | | | | | | |
|---|---|---|---|---|---|---|---|
| 2.0 dCi 170 (EGMM, EGMV) (M9R 710) | Diesel | FWD | 1997 | 125 | 170 | 06.19- | ■ |
| **TRAFIC III (FG_) 05.14-** | | | | | | **Van (LCVs-N1 Segment)** | |
| E-Tech Electric (FGJA) | Eléctrico | FWD | | 90 | 122 | 05.23- | ■ |
| 1.6 dCi 90 (FGME) (R9M 408) | Diesel | FWD | 1598 | 66 | 90 | 05.14- | ■ |
| 1.6 dCi 95 (FGMJ, FGMR) (R9M 413) | Diesel | FWD | 1598 | 70 | 95 | 07.15- | ■ |
| 1.6 dCi 95 (FGMJ, FGMR) (R9M 415) | Diesel | FWD | 1598 | 70 | 95 | 07.15- | ■ |
| 1.6 dCi 115 (FGMD) (R9M 408) | Diesel | FWD | 1598 | 85 | 116 | 05.14- | ■ |
| 1.6 dCi 120 (FGMB, FGMC) (R9M 450) | Diesel | FWD | 1598 | 88 | 120 | 05.14- | ■ |
| 1.6 dCi 120 (FGMK) (R9M 413) | Diesel | FWD | 1598 | 89 | 121 | 07.15- | ■ |
| 1.6 dCi 125 (FGMH) (R9M 452) | Diesel | FWD | 1598 | 92 | 125 | 07.15- | ■ |
| 1.6 dCi 140 (FGMA, FGMC) (R9M 450) | Diesel | FWD | 1598 | 103 | 140 | 05.14- | ■ |
| 1.6 dCi 145 (FGMG) (R9M 452) | Diesel | FWD | 1598 | 107 | 145 | 07.15- | ■ |
| 2.0 dCi 110 (FGMW) | Diesel | FWD | 1997 | 81 | 110 | 08.21- | ■ |
| 2.0 dCi 120 (FGMN) (M9R 710) | Diesel | FWD | 1997 | 88 | 120 | 06.19- | ■ |
| 2.0 dCi 130 (FGMY) | Diesel | FWD | 1997 | 96 | 131 | 08.21- | ■ |
| 2.0 dCi 145 (FGML) (M9R 710) | Diesel | FWD | 1997 | 107 | 145 | 06.19- | ■ |
| 2.0 dCi 150 (FGMU) | Diesel | FWD | 1997 | 110 | 150 | 08.21- | ■ |
| 2.0 dCi 170 (FGMM, FGMV) (M9R 710) | Diesel | FWD | 1997 | 125 | 170 | 06.19- | ■ |
| **VAUXHALL** | | | | | | | |
| **VIVARO (A) (X83) 08.01-07.14** | | | | | | **Bus (Minibus-M2-Segment)** | |
| 2.0 ECOTEC (F4R 820) | Gasolina | FWD | 1998 | 86 | 117 | 08.06-07.14 | ■ |
| 2.0 16V (F4R 720) | Gasolina | FWD | 1998 | 88 | 120 | 08.01-12.06 | ■ |
| 1.9 Di (F9Q 762) | Diesel | FWD | 1870 | 59 | 80 | 08.01-12.06 | ■ |
| 1.9 DTI (F9Q 760) | Diesel | FWD | 1870 | 74 | 101 | 08.01-12.06 | ■ |
| 2.0 CDTi (M9R 630) | Diesel | FWD | 1995 | 66 | 90 | 01.06-07.14 | ■ |
| 2.0 CDTi (M9R 780) | Diesel | FWD | 1995 | 66 | 90 | 01.06-07.14 | ■ |
| 2.0 CDTi (M9R 782) | Diesel | FWD | 1995 | 66 | 90 | 01.06-07.14 | ■ |
| 2.0 CDTi (M9R 786) | Diesel | FWD | 1995 | 66 | 90 | 01.06-07.14 | ■ |
| 2.0 CDTi (M9R 630) | Diesel | FWD | 1995 | 84 | 114 | 08.06-07.14 | ■ |
| 2.0 CDTi (M9R 780) | Diesel | FWD | 1995 | 84 | 114 | 08.06-07.14 | ■ |
| 2.0 CDTi (M9R 784) | Diesel | FWD | 1995 | 84 | 114 | 08.06-07.14 | ■ |
| 2.0 CDTi (M9R 786) | Diesel | FWD | 1995 | 84 | 114 | 08.06-07.14 | ■ |
| 2.0 CDTi (M9R 788) | Diesel | FWD | 1995 | 84 | 114 | 08.06-07.14 | ■ |
| 2.5 DTi (G9U 730) | Diesel | FWD | 2464 | 99 | 135 | 07.03-07.14 | ■ |
| 2.5 CDTI (G9U 630) | Diesel | FWD | 2464 | 107 | 146 | 01.06-07.14 | ■ |
| **VIVARO (A) (X83) 04.03-07.14** | | | | | | **Platform/Chassis (LCVs-N1 Segment)** | |
| 2.0 ECOTEC (F4R 820) | Gasolina | FWD | 1998 | 86 | 117 | 08.06-07.14 | ■ |
| 2.0 16V (F4R 720) | Gasolina | FWD | 1998 | 88 | 120 | 04.03-07.14 | ■ |
| 2.0 CDTi (M9R 630) | Diesel | FWD | 1995 | 66 | 90 | 01.06-07.14 | ■ |
| 2.0 CDTi (M9R 780) | Diesel | FWD | 1995 | 66 | 90 | 01.06-07.14 | ■ |
| 2.0 CDTi (M9R 782) | Diesel | FWD | 1995 | 66 | 90 | 01.06-07.14 | ■ |
| 2.0 CDTi (M9R 786) | Diesel | FWD | 1995 | 66 | 90 | 01.06-07.14 | ■ |
| 2.0 CDTi (M9R 630) | Diesel | FWD | 1995 | 84 | 114 | 08.06-07.14 | ■ |
| 2.0 CDTi (M9R 780) | Diesel | FWD | 1995 | 84 | 114 | 08.06-07.14 | ■ |
| 2.0 CDTi (M9R 788) | Diesel | FWD | 1995 | 84 | 114 | 08.06-07.14 | ■ |
| 2.5 CDTI (G9U 730) | Diesel | FWD | 2464 | 99 | 135 | 04.03-07.06 | ■ |
| 2.5 CDTI (G9U 630) | Diesel | FWD | 2464 | 107 | 146 | 08.06-07.14 | ■ |
| 2.5 CDTI | Diesel | FWD | 2464 | 107 | 146 | 08.06-07.14 | ■ |
| **VIVARO (A) (X83) 08.01-07.14** | | | | | | **Van (LCVs-N1 Segment)** | |
| 2.0 ECOTEC (F4R 820) | Gasolina | FWD | 1998 | 86 | 117 | 08.06-07.14 | ■ |

| | | | | | | | |
|---|---|---|---|---|---|---|---|
| 2.0 16V (F4R 720) | Gasolina | FWD | 1998 | 88 | 120 | 08.01-12.06 | ■ |
| 1.9 Di (F9Q 762) | Diesel | FWD | 1870 | 59 | 80 | 08.01-12.06 | ■ |
| 1.9 DTI (F9Q 760) | Diesel | FWD | 1870 | 74 | 101 | 08.01-12.06 | ■ |
| 2.0 CDTi (M9R 630) | Diesel | FWD | 1995 | 66 | 90 | 01.06-07.14 | ■ |
| 2.0 CDTi (M9R 692) | Diesel | FWD | 1995 | 66 | 90 | 01.06-07.14 | ■ |
| 2.0 CDTi (M9R 780) | Diesel | FWD | 1995 | 66 | 90 | 01.06-07.14 | ■ |
| 2.0 CDTi (M9R 782) | Diesel | FWD | 1995 | 66 | 90 | 01.06-07.14 | ■ |
| 2.0 CDTi (M9R 786) | Diesel | FWD | 1995 | 66 | 90 | 01.06-07.14 | ■ |
| 2.0 CDTi (M9R 630) | Diesel | FWD | 1995 | 84 | 114 | 08.06-07.14 | ■ |
| 2.0 CDTi (M9R 692) | Diesel | FWD | 1995 | 84 | 114 | 08.06-07.14 | ■ |
| 2.0 CDTi (M9R 780) | Diesel | FWD | 1995 | 84 | 114 | 08.06-07.14 | ■ |
| 2.0 CDTi (M9R 788) | Diesel | FWD | 1995 | 84 | 114 | 08.06-07.14 | ■ |
| 2.5 DTi (G9U 730) | Diesel | FWD | 2464 | 99 | 135 | 07.03-07.14 | ■ |
| 2.5 CDTI (G9U 630) | Diesel | FWD | 2464 | 107 | 146 | 08.06-07.14 | ■ |
| **VIVARO II (B) (X82) 05.14-** | | | | | | **Bus (Minibus-M2-Segment)** | |
| 1.6 CDTi (R9M 408) | Diesel | FWD | 1598 | 66 | 90 | 05.14-12.19 | ■ |
| 1.6 CDTi (R9M 413) | Diesel | FWD | 1598 | 70 | 95 | 08.16-12.19 | ■ |
| 1.6 CDTi (R9M 408) | Diesel | FWD | 1598 | 85 | 115 | 05.14-12.19 | ■ |
| 1.6 CDTi (R9M 450) | Diesel | FWD | 1598 | 88 | 120 | 05.14-12.19 | ■ |
| 1.6 CDTi | Diesel | FWD | 1598 | 89 | 121 | 09.16- | ■ |
| 1.6 CDTi | Diesel | FWD | 1598 | 89 | 121 | 01.19-12.19 | ■ |
| 1.6 CDTi (R9M 450) | Diesel | FWD | 1598 | 92 | 125 | 08.16-12.19 | ■ |
| 1.6 CDTi (R9M 450) | Diesel | FWD | 1598 | 103 | 140 | 06.14-12.19 | ■ |
| 1.6 CDTi | Diesel | FWD | 1598 | 107 | 145 | 08.16- | ■ |
| 1.6 CDTi | Diesel | FWD | 1598 | 107 | 145 | 08.16-12.19 | ■ |
| **VIVARO II (B) (X82) 05.14-** | | | | | | **Platform/Chassis (LCVs-N1 Segment)** | |
| 1.6 CDTi (R9M 408) | Diesel | FWD | 1598 | 85 | 115 | 05.14-12.19 | ■ |
| 1.6 CDTi (R9M 450) | Diesel | FWD | 1598 | 88 | 120 | 05.14-12.19 | ■ |
| 1.6 CDTi (R9M 450) | Diesel | FWD | 1598 | 92 | 125 | 08.16-12.19 | ■ |
| 1.6 CDTi (R9M 450) | Diesel | FWD | 1598 | 103 | 140 | 05.14-12.19 | ■ |
| 1.6 CDTi (R9M 450) | Diesel | FWD | 1598 | 107 | 145 | 08.16-12.19 | ■ |
| **VIVARO II (B) (X82) 05.14-** | | | | | | **Van (LCVs-N1 Segment)** | |
| 1.6 CDTi (R9M 408) | Diesel | FWD | 1598 | 66 | 90 | 05.14-12.19 | ■ |
| 1.6 CDTi (R9M 413) | Diesel | FWD | 1598 | 70 | 95 | 08.16-12.19 | ■ |
| 1.6 CDTi (R9M 408) | Diesel | FWD | 1598 | 85 | 115 | 05.14-12.19 | ■ |
| 1.6 CDTi (R9M 450) | Diesel | FWD | 1598 | 88 | 120 | 05.14-12.19 | ■ |
| 1.6 CDTi | Diesel | FWD | 1598 | 89 | 121 | 09.16- | ■ |
| 1.6 CDTi | Diesel | FWD | 1598 | 89 | 121 | 08.16-12.19 | ■ |
| 1.6 CDTi (R9M 450) | Diesel | FWD | 1598 | 92 | 125 | 08.16-12.19 | ■ |
| 1.6 CDTi (R9M 450) | Diesel | FWD | 1598 | 103 | 140 | 05.14-12.19 | ■ |
| 1.6 CDTi (R9M 450) | Diesel | FWD | 1598 | 107 | 145 | 08.16-12.19 | ■ |