LISTA DE APLICACIONES - BUYERS GUIDE

78BD9049-2

8 424073 149190

Weight: 15.050

O.E.M.	MAKE
4804 637	CHEVROLET
96 625 873	OPEL

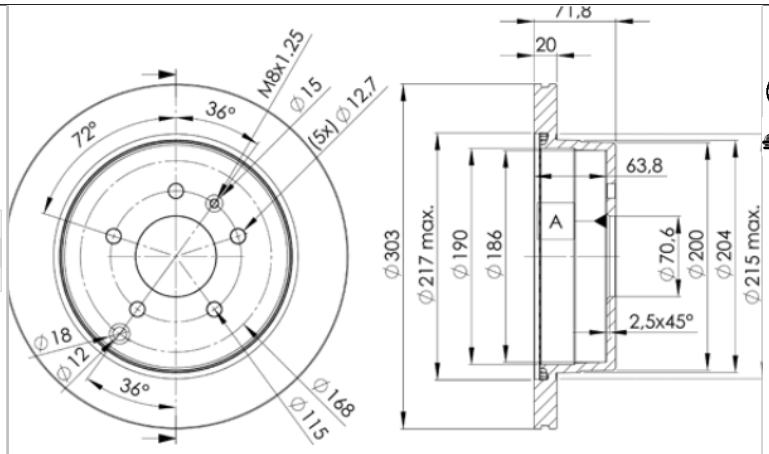

78BD9049-2

E1 90R-02C0438/1544

Ø303x20x71.8

MAKE
CHEVROLET
DAEWOO
OPEL
PONTIAC
SATURN
SUZUKI
VAUXHALL

		Trac.	CC	Kw	CV		Front / Rear
CHEVROLET							
CAPTIVA (C100) 06.06-					**SUV Van (Compact SUV-J Segment)**		
VCDi	Diesel	FWD	1991	93	126	10.06-12.09	■
VCDi A las 4 ruedas	Diesel	4WD	1991	110	150	07.06-02.11	■
CAPTIVA (C100, C140) 06.06-					**SUV (Compact SUV-J Segment)**		
2.4	Gasolina	FWD	2384	122	165	01.11-	■
2.4 4WD	Gasolina	4WD	2384	122	165	06.11-	■
2.4 (LE5)	Gasolina	FWD	2384	123	167	03.11-	■
2.4 4WD (LE5)	Gasolina	4WD	2384	123	167	03.11-	■
2.4 (LE9(145CUL4))	Gasolina	FWD	2384	124	169	01.11-	■
2.4 4WD (LE9(145CUL4))	Gasolina	4WD	2384	124	169	03.11-	■
2.4 (LE9(145CUL4))	Gasolina	FWD	2384	126	171	11.12-	■
2.4 4WD (LE9(145CUL4))	Gasolina	4WD	2384	126	171	11.12-	■
2.4 (LD9(147CUL4))	Gasolina	FWD	2405	100	136	06.06-02.11	■
2.4 4WD (LD9(147CUL4))	Gasolina	4WD	2405	100	136	06.06-02.11	■
2.4 (LD9(147CUL4))	Gasolina	FWD	2405	103	140	12.06-02.11	■
2.4 4WD (LD9(147CUL4))	Gasolina	4WD	2405	103	140	12.06-02.11	■
2.4 16V 4WD (LD9(147CUL4))	Gasolina	4WD	2405	105	143	12.06-02.11	■
3.0 4WD (LFW)	Gasolina	4WD	2997	186	253	01.12-	■
3.0 4WD (LF1)	Gasolina	4WD	2997	190	258	11.10-09.18	■
3.0 4WD (LFW)	Gasolina	4WD	2997	190	258	11.10-09.18	■
3.0	Gasolina	FWD	2997	197	268	01.11-	■
3.0	Gasolina	FWD	2997	197	268	01.11-	■
3.0 4WD (LFW)	Gasolina	4WD	2997	197	268	01.12-	■
3.2 4WD (LU1)	Gasolina	4WD	3195	169	230	06.06-	■

2.4 LPG (LD9(147CUL4))	Gasol./Gas (LPG)	FWD	2405	100	136	01.07-	■
2.4 LPG 4WD (LD9(147CUL4))	Gasol./Gas (LPG)	4WD	2405	100	136	01.07-02.11	■
2.4 Flexfuel	Gasol./Etanol	FWD	2384	121	165	12.12-	■
2.4 Flexfuel 4WD	Gasol./Etanol	4WD	2384	121	165	12.12-	■
3.0 Flexfuel (LFW)	Gasol./Etanol	FWD	2997	197	268	01.11-	■
3.0 Flexfuel 4WD (LFW)	Gasol./Etanol	4WD	2997	197	268	01.11-	■
2.0 D (LFS)	Diesel	FWD	1956	125	170	01.16-	■
2.0 D (LLW)	Diesel	FWD	1991	93	126	10.06-12.09	■
2.0 D 4WD (LLW)	Diesel	4WD	1991	93	126	10.06-12.09	■
2.0 D (LLW)	Diesel	FWD	1991	110	150	09.07-	■
2.0 D 4WD (LLW)	Diesel	4WD	1991	110	150	10.06-	■
2.0 D (LNP)	Diesel	FWD	1998	120	163	01.11-	■
2.0 D 4WD (LNP)	Diesel	4WD	1998	120	163	01.11-	■
2.2 D (LNQ)	Diesel	FWD	2231	120	163	03.11-	■
2.2 D 4WD (LNQ)	Diesel	4WD	2231	120	163	03.11-	■
2.2 D (LNQ)	Diesel	FWD	2231	135	184	02.11-09.18	■
2.2 D 4WD (LNQ)	Diesel	4WD	2231	135	184	03.11-	■
CAPTIVA SPORT 01.07-						**SUV (Compact SUV-J Segment)**	
2.4 (LEA)	Gasolina	FWD	2384	134	182	01.12-	■
2.4	Gasolina	FWD	2405	100	136	01.07-	■
3.0	Gasolina	FWD	2997	194	264	01.12-	■
3.0 (LF1)	Gasolina	FWD	2997	197	268	01.12-	■
3.0 (LFW)	Gasolina	FWD	2997	197	268	01.12-	■
3.0 AWD (LF1)	Gasolina	4WD	2997	197	268	01.12-	■
3.0 AWD (LFW)	Gasolina	4WD	2997	197	268	01.12-	■
EQUINOX 04.03-12.09						**SUV (Compact SUV-J Segment)**	
3.4 (LNJ)	Gasolina	FWD	3350	138	188	04.03-09.09	■
3.4 AWD (LNJ)	Gasolina	4WD	3350	138	188	04.03-09.09	■
DAEWOO							
WINSTORM 12.06-						**SUV (Compact SUV-J Segment)**	
2.4 LS (Z 24 XED)	Gasolina	FWD	2405	103	140	12.06-	■
2.4 LT 4x4	Gasolina	4WD	2405	103	140	12.06-	■
2.4 (Z 24 XED)	Gasolina	FWD	2405	104	141	12.06-	■
2.4 4x4	Gasolina	4WD	2405	104	141	12.06-	■
3.2 Executive 4x4 (Z 32 SEE)	Gasolina	4WD	3195	167	227	12.06-	■
2.0 D 4x4	Diesel	4WD	1991	110	150	01.07-02.11	■
OPEL							
ANTARA A (L07) 08.06-08.17						**SUV (Compact SUV-J Segment)**	
2.4 (A 24 XE)	Gasolina	FWD	2384	123	167	12.10-02.15	■
2.4 (A 24 XF)	Gasolina	FWD	2384	123	167	12.10-02.15	■
2.4 4x4 (A 24 XE)	Gasolina	4WD	2384	123	167	12.10-02.15	■
2.4 4x4 (A 24 XF)	Gasolina	4WD	2384	123	167	12.10-02.15	■
2.4 (Z 24 XE)	Gasolina	FWD	2405	103	140	09.08-12.11	■
2.4 4x4 (Z 24 XE)	Gasolina	4WD	2405	103	140	08.06-12.11	■
2.4 (Z 24 XE)	Gasolina	4WD	2405	104	141	08.06-12.11	■
3.0 (A 30 XF)	Gasolina	4WD	2997	183	249	07.13-12.14	■
3.0 (A 30 XH)	Gasolina	4WD	2997	183	249	07.13-12.14	■

3.0 (A 30 XF)	Gasolina	4WD	2997	190	258	11.10-12.15	■
3.0 (A 30 XH)	Gasolina	4WD	2997	190	258	11.10-12.15	■
3.2 V6 (Z 32 SEE)	Gasolina	4WD	3195	167	227	08.06-12.11	■
2.4 LPG 4x4 (Z 24 XE)	Gasol./Gas (LPG)	4WD	2405	103	140	08.06-12.10	■
2.0 CDTi (B 20 DTH)	Diesel	FWD	1956	125	170	01.16-08.17	■
2.0 CDTI 4x4 (B 20 DTH)	Diesel	4WD	1956	125	170	01.16-08.17	■
2.0 CDTi (Z 20 S)	Diesel	4WD	1991	93	127	03.07-12.11	■
2.0 CDTi (Z 20 DM)	Diesel	FWD	1991	93	127	09.08-12.11	■
2.0 CDTi (Z 20 DMH)	Diesel	FWD	1991	110	150	08.06-12.11	■
2.0 CDTI 4x4 (Z 20 DMH)	Diesel	4WD	1991	110	150	08.06-12.11	■
2.2 CDTi (A 22 DM)	Diesel	FWD	2231	120	163	12.10-12.15	■
2.2 CDTi 4x4 (A 22 DM)	Diesel	4WD	2231	120	163	12.10-12.15	■
2.2 CDTi (A 22 DM)	Diesel	FWD	2231	122	166	07.14-12.15	■
2.2 CDTi 4x4 (A 22 DMH)	Diesel	4WD	2231	135	184	12.10-12.15	■
PONTIAC							
TORRENT 08.04-12.09						**MPV (Large MPV-M1 Segment)**	
3.4 (LNJ)	Gasolina	FWD	3350	138	188	08.04-12.09	■
3.4 A las 4 ruedas (LNJ)	Gasolina	4WD	3350	138	188	08.04-12.09	■
SATURN							
VUE SUV II 09.07-12.10						**SUV (Compact SUV-J Segment)**	
2.4 (LAT)	Gasolina	FWD	2384	126	171	09.08-12.09	■
3.5 (LZ4)	Gasolina	FWD	3510	166	226	09.08-12.09	■
3.6 AWD	Gasolina	4WD	3564	192	261	09.07-12.10	■
SUZUKI							
XL-7 II (DA, DB) 09.06-12.09						**SUV (Compact SUV-J Segment)**	
3.6 (JC636) (N36A)	Gasolina	FWD	3564	188	256	09.06-12.09	■
3.6 A las 4 ruedas (JC636) (N36A)	Gasolina	4WD	3564	188	256	09.06-12.09	■
VAUXHALL							
ANTARA A (L07) 08.06-						**SUV (Compact SUV-J Segment)**	
2.4 (A 24 XE)	Gasolina	FWD	2384	123	167	12.10-04.15	■
2.4 (A 24 XF)	Gasolina	FWD	2384	123	167	12.10-04.15	■
2.4 4x4 (A 24 XE)	Gasolina	4WD	2384	123	167	12.10-04.15	■
2.4 4x4 (A 24 XF)	Gasolina	4WD	2384	123	167	12.10-04.15	■
2.4	Gasolina	FWD	2405	103	140	08.06-	■
2.4 (Z 24 XE)	Gasolina	FWD	2405	103	140	08.06-04.15	■
2.4 4x4 (Z 24 XE)	Gasolina	4WD	2405	103	140	08.06-04.15	■
3.2 V6 4x4	Gasolina	4WD	3195	167	227	11.06-04.15	■
2.4 LPG 4x4 (Z 24 XE)	Gasol./Gas (LPG)	4WD	2405	103	140	08.06-04.15	■
2.0 CDTi	Diesel	RWD	1991	93	126	03.07-	■
2.0 CDTi (Z 20 DM)	Diesel	FWD	1991	93	126	08.06-04.15	■
2.0 CDTI 4x4	Diesel	4WD	1991	93	126	08.06-04.15	■
2.0 CDTi	Diesel	RWD	1991	110	150	08.06-	■
2.0 CDTi (Z 20 DMH)	Diesel	FWD	1991	110	150	08.06-04.15	■
2.0 CDTI 4x4 (Z 20 DMH)	Diesel	4WD	1991	110	150	08.06-04.15	■
2.2 CDTi 4x4 (A 22 DM)	Diesel	4WD	2231	120	163	12.10-04.15	■
2.2 CDTi FWD (A 22 DM)	Diesel	FWD	2231	120	163	12.10-04.15	■
2.2 CDTi 4x4 (A 22 DMH)	Diesel	4WD	2231	135	184	12.10-04.15	■