LISTA DE APLICACIONES - BUYERS GUIDE

78BD4065-2

8 424073 145451

Weight: 17.880

O.E.M.	MAKE
3B0 615 301 B	VW
4B0 615 301 A	VW
4B0 615 301 C	VW
8D0 615 301 J	VW
8E0 615 301 R	VW
L8E0615301R	VW (SVW)

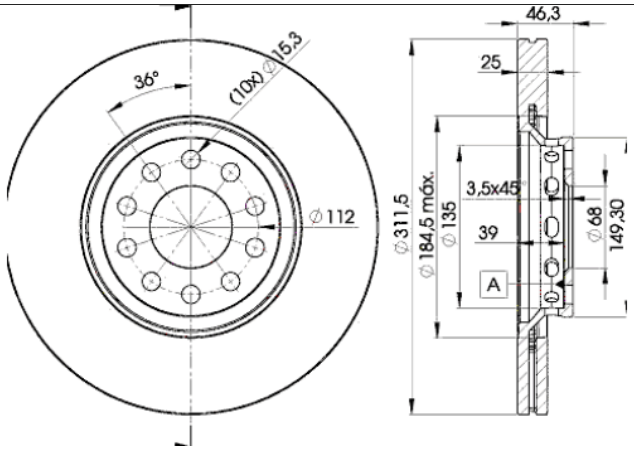

78BD4065-2

E1 90R-02C0289/1142

Ø312x25x46.2

MAKE
AUDI
SEAT
SKODA
VW

			Trac.	CC	Kw	CV		Front / Rear
AUDI								
A4 B5 Avant (8D5) 11.94-12.02							**Estate (Compact executive car-D Segment)**	
2.4		Gasolina	FWD	2393	110	150	07.95-07.97	■
2.8 (ATX)		Gasolina	FWD	2771	140	190	03.99-09.00	■
2.8 quattro (ATX)		Gasolina	4WD	2771	140	190	03.99-09.00	■
A4 II B6 (8H7) 01.02-12.09							**Convertible (Compact executive car-D Segment)**	
3.0 (BBJ)		Gasolina	FWD	2976	160	218	04.02-12.05	■
3.0 (ASN)		Gasolina	FWD	2976	162	220	04.02-12.05	■
3.0 (AVK)		Gasolina	FWD	2976	162	220	04.02-12.05	■
3.0 (BGN)		Gasolina	FWD	2976	162	220	04.02-12.05	■
2.5 TDI (BCZ)		Diesel	FWD	2496	120	163	08.02-12.05	■
2.5 TDI (BDG)		Diesel	FWD	2496	120	163	08.02-12.05	■
2.5 TDI (BFC)		Diesel	FWD	2496	120	163	08.02-12.05	■
A4 II B6 (8E2) 11.00-12.05							**Saloon (Compact executive car-D Segment)**	
3.0 (BBJ)		Gasolina	FWD	2976	160	218	04.01-12.04	■
3.0 quattro (BBJ)		Gasolina	4WD	2976	160	218	04.01-12.04	■
3.0 (ASN)		Gasolina	FWD	2976	162	220	11.00-12.04	■
3.0 (AVK)		Gasolina	FWD	2976	162	220	11.00-12.04	■
3.0 quattro (ASN)		Gasolina	4WD	2976	162	220	11.00-12.04	■
3.0 quattro (AVK)		Gasolina	4WD	2976	162	220	11.00-12.04	■
A4 II B6 Avant (8E5) 02.00-12.05							**Estate (Compact executive car-D Segment)**	
1.8 T quattro (BFB)	PR 1LF, PR 1LT	Gasolina	4WD	1781	120	163	07.02-12.04	■
1.8 T quattro (AMB)	PR 1LF, PR 1LT	Gasolina	4WD	1781	125	170	09.01-12.04	■

1.8 T quattro (BEX)		Gasolina	4WD	1781	140	190	11.02-12.04	■
3.0 (BBJ)		Gasolina	FWD	2976	160	218	04.01-12.04	■
3.0 quattro (BBJ)		Gasolina	4WD	2976	160	218	04.01-12.04	■
3.0 (ASN)		Gasolina	FWD	2976	162	220	09.01-12.04	■
3.0 quattro (ASN)		Gasolina	4WD	2976	162	220	09.01-12.04	■
3.0 quattro (AVK)		Gasolina	4WD	2976	162	220	09.01-12.04	■
A4 III B7 Avant (8ED) 11.04-11.08					**Estate (Compact executive car-D Segment)**			
1.8 T (BFB)	PR 1LF, PR 1LT	Gasolina	FWD	1781	120	163	11.04-06.08	■
1.8 T quattro (BFB)	PR 1LF, PR 1LT	Gasolina	4WD	1781	120	163	11.04-06.08	■
2.0 TFSI (BPJ)	PR 1LF, PR 1LT	Gasolina	FWD	1984	125	170	10.06-06.08	■
2.0 TFSI (BYK)	PR 1LF, PR 1LT	Gasolina	FWD	1984	125	170	10.06-06.08	■
2.0 TFSI (BGB)		Gasolina	FWD	1984	147	200	11.04-06.08	■
2.0 TFSI (BPG)		Gasolina	FWD	1984	147	200	11.04-06.08	■
2.0 TFSI (BWE)		Gasolina	FWD	1984	147	200	11.04-06.08	■
2.0 TFSI quattro (BGB)		Gasolina	4WD	1984	147	200	11.04-06.08	■
2.0 TFSI quattro (BPG)		Gasolina	4WD	1984	147	200	11.04-06.08	■
2.0 TFSI quattro (BWE)		Gasolina	4WD	1984	147	200	11.04-06.08	■
2.0 TFSI quattro (BWT)		Gasolina	4WD	1984	147	200	11.04-06.08	■
2.0 TFSI (BUL)	PR 1LF, PR 1LT	Gasolina	FWD	1984	162	220	06.05-06.08	■
2.0 TFSI quattro (BUL)	PR 1LF, PR 1LT	Gasolina	4WD	1984	162	220	06.05-06.08	■
3.0 quattro (BBJ)	PR 1LF, PR 1LT	Gasolina	4WD	2976	160	218	11.04-07.06	■
2.0 TDI (BVA)		Diesel	FWD	1968	120	163	06.06-06.08	■
2.0 TDI quattro (BVA)		Diesel	4WD	1968	120	163	06.06-06.08	■
2.0 TDI (BRD)		Diesel	FWD	1968	125	170	06.06-06.08	■
2.0 TDI quattro (BRD)		Diesel	4WD	1968	125	170	06.06-06.08	■
2.5 TDI (BDG)	PR 1LF, PR 1LT	Diesel	FWD	2496	120	163	11.04-05.06	■
A4 III B7 (8HE) 01.02-01.10					**Convertible (Compact executive car-D Segment)**			
1.8 T		Gasolina	FWD	1781	120	163	01.06-03.09	■
3.0 TDI quattro (BKN)		Diesel	4WD	2967	150	204	01.06-03.09	■
3.0 TDI quattro (ASB)		Diesel	4WD	2967	171	233	01.06-03.09	■
A4 III B7 (8EC) 11.04-01.09					**Saloon (Compact executive car-D Segment)**			
1.8 T (BFB)		Gasolina	FWD	1781	120	163	11.04-06.08	■
1.8 T quattro (BFB)	PR 1LE, PR 1LT	Gasolina	4WD	1781	120	163	11.04-06.08	■
2.0 TFSI (BPJ)		Gasolina	FWD	1984	125	170	10.06-06.08	■
2.0 TFSI (BYK)		Gasolina	FWD	1984	125	170	10.06-06.08	■
2.0 TFSI (BGB)		Gasolina	FWD	1984	147	200	11.04-06.08	■
2.0 TFSI (BPG)		Gasolina	FWD	1984	147	200	11.04-06.08	■
2.0 TFSI (BWE)		Gasolina	FWD	1984	147	200	11.04-06.08	■
2.0 TFSI (BWT)		Gasolina	FWD	1984	147	200	11.04-06.08	■
2.0 TFSI quattro (BGB)		Gasolina	4WD	1984	147	200	11.04-06.08	■
2.0 TFSI quattro (BPG)		Gasolina	4WD	1984	147	200	11.04-06.08	■
2.0 TFSI quattro (BWE)		Gasolina	4WD	1984	147	200	11.04-06.08	■
2.0 TFSI quattro (BWT)		Gasolina	4WD	1984	147	200	11.04-06.08	■
2.0 TFSI (BUL)	PR 1LF, PR 1LT	Gasolina	FWD	1984	162	220	06.05-06.08	■
3.0 quattro (BBJ)	PR 1LF, PR 1LT	Gasolina	4WD	2976	160	218	11.04-07.06	■
2.0 TDI (BVA)		Diesel	FWD	1968	120	163	06.06-06.08	■
2.0 TDI quattro (BVA)		Diesel	4WD	1968	120	163	06.06-06.08	■
2.0 TDI (BRD)		Diesel	FWD	1968	125	170	06.06-06.08	■
2.0 TDI quattro (BRD)		Diesel	4WD	1968	125	170	06.06-06.08	■

LISTA DE APLICACIONES - BUYERS GUIDE

A6 II C5 Avant (4B5, 4B6) 11.97-01.06								Estate (Executive car-E Segment)
1.8 (AJP)	PR 1LF, PR 1LT	Gasolina	FWD	1781	92	125	12.97-01.05	■
1.8 (AQE)	PR 1LF, PR 1LT	Gasolina	FWD	1781	92	125	12.97-01.05	■
1.8 (ARH)	PR 1LF, PR 1LT	Gasolina	FWD	1781	92	125	12.97-01.05	■
1.8 T (AEB)	PR 1LF, PR 1LT	Gasolina	FWD	1781	110	150	12.97-01.05	■
1.8 T (ANB)	PR 1LF, PR 1LT	Gasolina	FWD	1781	110	150	12.97-01.05	■
1.8 T (APU)	PR 1LF, PR 1LT	Gasolina	FWD	1781	110	150	12.97-01.05	■
1.8 T (ARK)	PR 1LF, PR 1LT	Gasolina	FWD	1781	110	150	12.97-01.05	■
1.8 T (AWT)	PR 1LF, PR 1LT	Gasolina	FWD	1781	110	150	12.97-01.05	■
1.8 T quattro (AEB)	PR 1LF, PR 1LT	Gasolina	4WD	1781	110	150	12.97-01.05	■
1.8 T quattro (ANB)	PR 1LF, PR 1LT	Gasolina	4WD	1781	110	150	12.97-01.05	■
1.8 T quattro (APU)	PR 1LF, PR 1LT	Gasolina	4WD	1781	110	150	12.97-01.05	■
1.8 T quattro (ARK)	PR 1LF, PR 1LT	Gasolina	4WD	1781	110	150	12.97-01.05	■
1.8 T quattro (AWT)	PR 1LF, PR 1LT	Gasolina	4WD	1781	110	150	12.97-01.05	■
1.8 T (AJL)	PR 1LF, PR 1LT	Gasolina	FWD	1781	132	180	04.99-01.05	■
1.8 T quattro (AJL)	PR 1LF, PR 1LT	Gasolina	4WD	1781	132	180	12.97-01.05	■
2.0 (ALT)	PR 1LF, PR 1LT	Gasolina	FWD	1984	96	130	08.01-01.05	■
2.4 (ALW)	PR 1LF, PR 1LT	Gasolina	FWD	2393	100	136	07.98-01.05	■
2.4 (ARN)	PR 1LF, PR 1LT	Gasolina	FWD	2393	100	136	07.98-01.05	■
2.4 (ASM)	PR 1LF, PR 1LT	Gasolina	FWD	2393	100	136	07.98-01.05	■
2.4 (APC)	PR 1LF, PR 1LT	Gasolina	FWD	2393	115	156	12.97-01.05	■
2.4 quattro (APC)	PR 1LF, PR 1LT	Gasolina	4WD	2393	115	156	08.98-05.01	■
2.4 (AJG)	PR 1LF, PR 1LT	Gasolina	FWD	2393	120	163	12.97-01.05	■
2.4 (AMM)	PR 1LF, PR 1LT	Gasolina	FWD	2393	120	163	12.97-01.05	■
2.4 (APZ)	PR 1LF, PR 1LT	Gasolina	FWD	2393	120	163	12.97-01.05	■
2.4 quattro (AJG)	PR 1LF, PR 1LT	Gasolina	4WD	2393	120	163	12.97-01.05	■
2.4 quattro (APZ)	PR 1LF, PR 1LT	Gasolina	4WD	2393	120	163	12.97-01.05	■
2.4 (AGA)	PR 1LF, PR 1LT	Gasolina	FWD	2393	121	165	12.97-01.05	■
2.4 (ALF)	PR 1LF, PR 1LT	Gasolina	FWD	2393	121	165	12.97-01.05	■
2.4 (AML)	PR 1LF, PR 1LT	Gasolina	FWD	2393	121	165	12.97-01.05	■
2.4 (APS)	PR 1LF, PR 1LT	Gasolina	FWD	2393	121	165	12.97-01.05	■
2.4 (ARJ)	PR 1LF, PR 1LT	Gasolina	FWD	2393	121	165	12.97-01.05	■
2.4 quattro (AGA)	PR 1LF, PR 1LT	Gasolina	4WD	2393	121	165	12.97-01.05	■
2.4 quattro (ALF)	PR 1LF, PR 1LT	Gasolina	4WD	2393	121	165	12.97-01.05	■
2.4 quattro (AML)	PR 1LF, PR 1LT	Gasolina	4WD	2393	121	165	12.97-01.05	■
2.4 quattro (APS)	PR 1LF, PR 1LT	Gasolina	4WD	2393	121	165	12.97-01.05	■
2.4 quattro (ARJ)	PR 1LF, PR 1LT	Gasolina	4WD	2393	121	165	12.97-01.05	■
2.4 (BDV)	PR 1LF, PR 1LT	Gasolina	FWD	2393	125	170	08.01-01.05	■
2.4 quattro (BDV)	PR 1LB, PR 1LF	Gasolina	4WD	2393	125	170	08.01-01.05	■
2.8 (AGE)	PR 1LF, PR 1LT	Gasolina	FWD	2771	132	180	12.97-05.00	■
2.8 (ATX)	PR 1LF, PR 1LT	Gasolina	FWD	2771	140	190	07.99-01.05	■
2.8 quattro		Gasolina	4WD	2771	140	190	08.98-04.01	■
2.8 (ACK)	PR 1LF, PR 1LT	Gasolina	FWD	2771	142	193	12.97-01.05	■
2.8 (ALG)	PR 1LF, PR 1LT	Gasolina	FWD	2771	142	193	12.97-01.05	■
2.8 (AMX)	PR 1LF, PR 1LT	Gasolina	FWD	2771	142	193	12.97-01.05	■
2.8 (APR)	PR 1LF, PR 1LT	Gasolina	FWD	2771	142	193	12.97-01.05	■
2.8 (AQD)	PR 1LF, PR 1LT	Gasolina	FWD	2771	142	193	12.97-01.05	■
2.8 quattro (ACK)	PR 1LF, PR 1LT	Gasolina	4WD	2771	142	193	12.97-01.05	■
2.8 quattro (ALG)	PR 1LF, PR 1LT	Gasolina	4WD	2771	142	193	12.97-01.05	■
2.8 quattro (AMX)	PR 1LF, PR 1LT	Gasolina	4WD	2771	142	193	12.97-01.05	■
2.8 quattro (APR)	PR 1LF, PR 1LT	Gasolina	4WD	2771	142	193	12.97-01.05	■

2.8 quattro (AQD)	PR 1LF, PR 1LT	Gasolina	4WD	2771	142	193	12.97-01.05	■
2.8 quattro (ATQ)	PR 1LF, PR 1LT	Gasolina	4WD	2771	142	193	12.97-01.05	■
3.0 (BBJ)		Gasolina	FWD	2976	160	218	06.01-01.05	■
3.0 quattro (BBJ)		Gasolina	4WD	2976	160	218	06.01-01.05	■
3.0 (ASN)		Gasolina	FWD	2976	162	220	08.01-01.05	■
3.0 quattro (ASN)		Gasolina	4WD	2976	162	220	08.01-01.05	■
3.7 (AQG)		Gasolina	FWD	3697	191	260	03.99-01.05	■
1.9 TDI (AFN)	PR 1LF, PR 1LT	Diesel	FWD	1896	81	110	02.98-04.01	■
1.9 TDI (AVG)	PR 1LF, PR 1LT	Diesel	FWD	1896	81	110	02.98-04.01	■
1.9 TDI (AJM)	PR 1LF, PR 1LT	Diesel	FWD	1896	85	115	07.00-01.05	■
1.9 TDI (AVF)	PR 1LF, PR 1LT	Diesel	FWD	1896	96	130	08.01-01.05	■
1.9 TDI (AWX)	PR 1LF, PR 1LT	Diesel	FWD	1896	96	130	08.01-01.05	■
2.5 TDI (AFB)	PR 1LF, PR 1LT	Diesel	FWD	2496	110	150	12.97-01.05	■
2.5 TDI (AKN)	PR 1LF, PR 1LT	Diesel	FWD	2496	110	150	12.97-01.05	■
2.5 TDI quattro (AFB)	PR 1LF, PR 1LT	Diesel	4WD	2496	110	150	12.97-01.05	■
2.5 TDI quattro (AKN)	PR 1LF, PR 1LT	Diesel	4WD	2496	110	150	12.97-01.05	■
2.5 TDI (AYM)	PR 1LF, PR 1LT	Diesel	FWD	2496	114	155	08.01-01.05	■
2.5 TDI (BCZ)	PR 1LF, PR 1LT	Diesel	FWD	2496	120	163	07.02-01.05	■
2.5 TDI (BDG)	PR 1LF, PR 1LT	Diesel	FWD	2496	120	163	07.02-01.05	■
2.5 TDI (BFC)	PR 1LF, PR 1LT	Diesel	FWD	2496	120	163	07.02-01.05	■
2.5 TDI (AKE)	PR 1LF, PR 1LT	Diesel	FWD	2496	132	180	02.00-01.05	■
2.5 TDI (BAU)	PR 1LF, PR 1LT	Diesel	FWD	2496	132	180	02.00-01.05	■
2.5 TDI (BDH)	PR 1LF, PR 1LT	Diesel	FWD	2496	132	180	02.00-01.05	■
2.5 TDI quattro (AKE)	06/01-	Diesel	4WD	2496	132	180	02.00-01.05	■
2.5 TDI quattro (BAU)	06/01-	Diesel	4WD	2496	132	180	02.00-01.05	■
2.5 TDI quattro (BDH)	06/01-	Diesel	4WD	2496	132	180	02.00-01.05	■
A6 II C5 (4B2, 4B4) 01.97-12.05					**Saloon (Executive car-E Segment)**			
1.8 T (AEB)	PR 1LF, PR 1LT	Gasolina	FWD	1781	110	150	01.97-01.05	■
1.8 T (ANB)	PR 1LF, PR 1LT	Gasolina	FWD	1781	110	150	01.97-01.05	■
1.8 T (APU)	PR 1LF, PR 1LT	Gasolina	FWD	1781	110	150	01.97-01.05	■
1.8 T (ARK)	PR 1LF, PR 1LT	Gasolina	FWD	1781	110	150	01.97-01.05	■
1.8 T (AWT)	PR 1LF, PR 1LT	Gasolina	FWD	1781	110	150	01.97-01.05	■
1.8 T quattro (AEB)	PR 1LF, PR 1LT	Gasolina	4WD	1781	110	150	02.97-01.05	■
1.8 T quattro (ANB)	PR 1LF, PR 1LT	Gasolina	4WD	1781	110	150	02.97-01.05	■
1.8 T quattro (APU)	PR 1LF, PR 1LT	Gasolina	4WD	1781	110	150	02.97-01.05	■
1.8 T quattro (ARK)	PR 1LF, PR 1LT	Gasolina	4WD	1781	110	150	02.97-01.05	■
1.8 T quattro (AWT)	PR 1LF, PR 1LT	Gasolina	4WD	1781	110	150	02.97-01.05	■
1.8 T (AJL)	PR 1LF, PR 1LT	Gasolina	FWD	1781	132	180	12.97-01.05	■
2.0 (ALT)	PR 1LF, PR 1LT	Gasolina	FWD	1984	96	130	08.01-01.05	■
2.4 (APC)	PR 1LF, PR 1LT	Gasolina	FWD	2393	115	156	02.97-01.05	■
2.4 quattro (APC)		Gasolina	4WD	2393	115	156	08.98-07.99	■
2.4 (AJG)	PR 1LF, PR 1LT	Gasolina	FWD	2393	120	163	02.97-01.05	■
2.4 (AMM)	PR 1LF, PR 1LT	Gasolina	FWD	2393	120	163	02.97-01.05	■
2.4 (APZ)	PR 1LF, PR 1LT	Gasolina	FWD	2393	120	163	02.97-01.05	■
2.4 quattro (AJG)	PR 1LF, PR 1LT	Gasolina	4WD	2393	120	163	02.97-01.05	■
2.4 quattro (APZ)	PR 1LF, PR 1LT	Gasolina	4WD	2393	120	163	02.97-01.05	■
2.4 (AGA)	PR 1LF, PR 1LT	Gasolina	FWD	2393	121	165	02.97-01.05	■
2.4 (ALF)	PR 1LF, PR 1LT	Gasolina	FWD	2393	121	165	02.97-01.05	■
2.4 (AML)	PR 1LF, PR 1LT	Gasolina	FWD	2393	121	165	02.97-01.05	■
2.4 (APS)	PR 1LF, PR 1LT	Gasolina	FWD	2393	121	165	02.97-01.05	■
2.4 (ARJ)	PR 1LF, PR 1LT	Gasolina	FWD	2393	121	165	02.97-01.05	■

2.4 quattro (AGA)	PR 1LF, PR 1LT	Gasolina	4WD	2393	121	165	02.97-01.05	■
2.4 quattro (ALF)	PR 1LF, PR 1LT	Gasolina	4WD	2393	121	165	02.97-01.05	■
2.4 quattro (AML)	PR 1LF, PR 1LT	Gasolina	4WD	2393	121	165	02.97-01.05	■
2.4 quattro (APS)	PR 1LF, PR 1LT	Gasolina	4WD	2393	121	165	02.97-01.05	■
2.4 quattro (ARJ)	PR 1LF, PR 1LT	Gasolina	4WD	2393	121	165	02.97-01.05	■
2.4 (BDV)	PR 1LF, PR 1LT	Gasolina	FWD	2393	125	170	08.01-01.05	■
2.4 quattro (BDV)	PR 1LF, PR 1LT	Gasolina	4WD	2393	125	170	08.01-01.05	■
2.8 (AGE)	PR 1LF, PR 1LT	Gasolina	FWD	2771	132	180	10.97-05.00	■
2.8 (ATX)	PR 1LF, PR 1LT	Gasolina	FWD	2771	140	190	07.99-01.05	■
2.8 (ACK)	PR 1LF, PR 1LT	Gasolina	FWD	2771	142	193	02.97-01.05	■
2.8 (ALG)	PR 1LF, PR 1LT	Gasolina	FWD	2771	142	193	02.97-01.05	■
2.8 (AMX)	PR 1LF, PR 1LT	Gasolina	FWD	2771	142	193	02.97-01.05	■
2.8 (APR)	PR 1LF, PR 1LT	Gasolina	FWD	2771	142	193	02.97-01.05	■
2.8 (AQD)	PR 1LF, PR 1LT	Gasolina	FWD	2771	142	193	02.97-01.05	■
2.8 (ATQ)	PR 1LF, PR 1LT	Gasolina	FWD	2771	142	193	02.97-01.05	■
2.8 24V	PR 1LF, PR 1LT	Gasolina	FWD	2771	142	193	05.97-07.99	■
2.8 quattro (ACK)	PR 1LF, PR 1LT	Gasolina	4WD	2771	142	193	02.97-01.05	■
2.8 quattro (ALG)	PR 1LF, PR 1LT	Gasolina	4WD	2771	142	193	02.97-01.05	■
2.8 quattro (AMX)	PR 1LF, PR 1LT	Gasolina	4WD	2771	142	193	02.97-01.05	■
2.8 quattro (APR)	PR 1LF, PR 1LT	Gasolina	4WD	2771	142	193	02.97-01.05	■
2.8 quattro (AQD)	PR 1LF, PR 1LT	Gasolina	4WD	2771	142	193	02.97-01.05	■
2.8 quattro (ATQ)	PR 1LF, PR 1LT	Gasolina	4WD	2771	142	193	02.97-01.05	■
3.0 (BBJ)		Gasolina	FWD	2976	160	218	06.01-01.05	■
3.0 quattro (BBJ)		Gasolina	4WD	2976	160	218	06.01-07.04	■
3.0 (ASN)		Gasolina	FWD	2976	162	220	08.01-01.05	■
3.0 quattro (ASN)		Gasolina	4WD	2976	162	220	08.01-01.05	■
3.7 (AQG)		Gasolina	FWD	3697	191	260	03.99-01.05	■
1.9 TDI (AFN)	PR 1LF, PR 1LT	Diesel	FWD	1896	81	110	04.97-10.00	■
1.9 TDI (AVG)	PR 1LF, PR 1LT	Diesel	FWD	1896	81	110	04.97-10.00	■
1.9 TDI (AJM)	PR 1LF, PR 1LT	Diesel	FWD	1896	85	115	07.00-01.05	■
1.9 TDI (AVF)	PR 1LF, PR 1LT	Diesel	FWD	1896	96	130	08.01-01.05	■
1.9 TDI (AWX)	PR 1LF, PR 1LT	Diesel	FWD	1896	96	130	08.01-01.05	■
2.5 TDI (AFB)	PR 1LF, PR 1LT	Diesel	FWD	2496	110	150	07.97-01.05	■
2.5 TDI (AKN)	PR 1LF, PR 1LT	Diesel	FWD	2496	110	150	07.97-01.05	■
2.5 TDI (AYM)	PR 1LF, PR 1LT	Diesel	FWD	2496	114	155	08.01-01.05	■
2.5 TDI (BCZ)	PR 1LF, PR 1LT	Diesel	FWD	2496	120	163	07.02-01.05	■
2.5 TDI (BDG)	PR 1LF, PR 1LT	Diesel	FWD	2496	120	163	07.02-01.05	■
2.5 TDI (BFC)	PR 1LF, PR 1LT	Diesel	FWD	2496	120	163	07.02-01.05	■
2.5 TDI (AKE)	PR 1LF, PR 1LT	Diesel	FWD	2496	132	180	02.00-01.05	■
2.5 TDI (BAU)	PR 1LF, PR 1LT	Diesel	FWD	2496	132	180	02.00-01.05	■
2.5 TDI (BDH)	PR 1LF, PR 1LT	Diesel	FWD	2496	132	180	02.00-01.05	■
2.5 TDI quattro (AKE)	PR 1LF, PR 1LT	Diesel	4WD	2496	132	180	02.00-01.05	■
2.5 TDI quattro (BAU)	PR 1LF, PR 1LT	Diesel	4WD	2496	132	180	02.00-01.05	■
2.5 TDI quattro (BDH)	PR 1LF, PR 1LT	Diesel	4WD	2496	132	180	02.00-01.05	■
A6 C4 (4A2) 06.94-01.98					**Saloon (Executive car-E Segment)**			
2.8 (ACK)		Gasolina	FWD	2771	142	193	12.95-10.97	■
2.8 quattro (ACK)		Gasolina	4WD	2771	142	193	12.95-10.97	■
SEAT								
EXEO (3R2) 12.08-					**Saloon (Compact executive car-D Segment)**			
1.8 T (CFMA)	PR 1LT	Gasolina	FWD	1781	110	150	12.08-05.10	■

1.8 TSI (CDHA)		Gasolina	FWD	1798	88	120	09.10-05.13	■
1.8 TSI (CDHB)		Gasolina	FWD	1798	118	160	05.10-05.13	■
2.0 TFSI (BWE)	PR 1LT	Gasolina	FWD	1984	147	200	03.09-05.13	■
2.0 TDI (CAGC)	PR 1LT	Diesel	FWD	1968	88	120	12.08-05.13	■
2.0 TDI (CJCC)	PR 1LT	Diesel	FWD	1968	88	120	12.08-05.13	■
2.0 TDI (CAGA)	PR 1LT	Diesel	FWD	1968	105	143	12.08-05.13	■
2.0 TDI (CJCA)	PR 1LT	Diesel	FWD	1968	105	143	12.08-05.13	■
2.0 TDI (CAHA)	PR 1LT	Diesel	FWD	1968	125	170	02.09-05.13	■
2.0 TDI (CGLB)	PR 1LT	Diesel	FWD	1968	125	170	02.09-05.13	■
EXEO Station Wagon (3R5) 05.09-					**Estate (Compact executive car-D Segment)**			
1.8 TSI (CDHB)		Gasolina	FWD	1798	118	160	05.10-05.13	■
2.0 TDI (CAHA)		Diesel	FWD	1968	125	170	05.09-05.13	■
2.0 TDI (CGLB)		Diesel	FWD	1968	125	170	05.09-05.13	■
SKODA								
SUPERB (3U4) 12.01-03.08					**Saloon (Executive car-E Segment)**			
2.0 (BWW)		Gasolina	FWD	1984	91	124	02.06-03.08	■
2.8 V6 (BBG)		Gasolina	FWD	2771	140	190	06.02-03.08	■
2.8 V6 (AMX)		Gasolina	FWD	2771	142	193	12.01-03.08	■
1.9 TDI (AVF)		Diesel	FWD	1896	96	130	12.01-03.08	■
1.9 TDI (AWX)		Diesel	FWD	1896	96	130	12.01-03.08	■
2.0 TDI (BSS)		Diesel	FWD	1968	103	140	10.05-03.08	■
2.5 TDI (AYM)		Diesel	FWD	2496	114	155	12.01-08.03	■
2.5 TDI (BDG)		Diesel	FWD	2496	120	163	06.03-03.08	■
VW								
PASSAT B5 (3B3) 10.00-12.05					**Saloon (Large family car-D Segment)**			
1.6 (ALZ)	Rim 16	Gasolina	FWD	1595	75	102	11.00-05.05	■
1.8	Rim 16	Gasolina	FWD	1781	92	125	03.03-03.05	■
1.8 T 20V (AWT)	Rim 16	Gasolina	FWD	1781	110	150	11.00-05.05	■
1.8 T (AWM)	Rim 16	Gasolina	FWD	1781	125	170	02.01-11.05	■
1.8 T 4motion (AWM)		Gasolina	4WD	1781	125	170	11.03-05.05	■
2.0 (AZM)	Rim 16	Gasolina	FWD	1984	85	115	11.00-05.05	■
2.0 4motion (AZM)	Rim 16	Gasolina	4WD	1984	85	115	11.00-05.05	■
2.0 (ALT)	Rim 16	Gasolina	FWD	1984	96	130	11.01-05.05	■
2.3 V5 (AZX)		Gasolina	FWD	2324	125	170	11.00-05.05	■
2.3 V5 4motion (AZX)		Gasolina	4WD	2324	125	170	11.00-05.05	■
2.8 (BBG)		Gasolina	FWD	2771	140	190	10.00-05.05	■
2.8 4motion (BBG)		Gasolina	4WD	2771	140	190	10.00-05.05	■
2.8 (AMX)		Gasolina	FWD	2771	142	193	05.02-05.03	■
2.8 (ATQ)		Gasolina	FWD	2771	142	193	05.02-05.03	■
2.8 4motion (AMX)	PR 1KD	Gasolina	4WD	2771	142	193	11.00-05.05	■
2.8 4motion (ATQ)	PR 1KD	Gasolina	4WD	2771	142	193	11.00-05.05	■
4.0 W8 4motion (BDN)		Gasolina	4WD	3999	202	275	09.01-09.04	■
4.0 W8 4motion (BDP)		Gasolina	4WD	3999	202	275	09.01-09.04	■
1.9 TDI (AVB)	Rim 16	Diesel	FWD	1896	74	101	11.00-05.05	■
1.9 TDI (AVF)	Rim 16	Diesel	FWD	1896	96	130	11.00-05.05	■
1.9 TDI (AWX)	Rim 16	Diesel	FWD	1896	96	130	11.00-05.05	■
1.9 TDI 4motion (AVF)	Rim 16	Diesel	4WD	1896	96	130	11.00-05.05	■
2.0 TDI (BGW)	Rim 16	Diesel	FWD	1968	100	136	12.03-05.05	■
2.0 TDI (BHW)	Rim 16	Diesel	FWD	1968	100	136	12.03-05.05	■
2.5 TDI (AKN)		Diesel	FWD	2496	110	150	11.00-05.05	■

2.5 TDI 4motion (AFB)		Diesel	4WD	2496	110	150	11.00-05.05	■
2.5 TDI 4motion (AKN)		Diesel	4WD	2496	110	150	11.00-05.05	■
2.5 TDI (BDG)		Diesel	FWD	2496	120	163	05.03-05.05	■
2.5 TDI 4motion (BAU)		Diesel	4WD	2496	132	180	01.03-05.05	■
2.5 TDI 4motion (BDH)		Diesel	4WD	2496	132	180	01.03-05.05	■
PASSAT B5 Variant (3B6) 09.00-08.05					**Estate (Large family car-D Segment)**			
1.6 (ALZ)	Rim 16	Gasolina	FWD	1595	75	102	11.00-05.05	■
1.8 T 20V (AWT)	Rim 16	Gasolina	FWD	1781	110	150	11.00-05.05	■
1.8 4motion (AWM)		Gasolina	4WD	1781	125	170	11.03-05.05	■
1.8 T (AWM)	Rim 16	Gasolina	FWD	1781	125	170	05.02-08.05	■
2.0 (AZM)	Rim 16	Gasolina	FWD	1984	85	115	11.00-05.05	■
2.0 4motion (AZM)	Rim 16	Gasolina	4WD	1984	85	115	11.00-05.05	■
2.0 (ALT)	Rim 16	Gasolina	FWD	1984	96	130	11.01-05.05	■
2.3 VR5 (AZX)		Gasolina	FWD	2324	125	170	11.00-05.05	■
2.3 VR5 4motion (AZX)		Gasolina	4WD	2324	125	170	11.00-05.05	■
2.8 (BBG)		Gasolina	FWD	2771	140	190	10.00-05.05	■
2.8 4motion (BBG)		Gasolina	4WD	2771	140	190	10.00-05.05	■
2.8 (ATQ)		Gasolina	FWD	2771	142	193	10.00-08.05	■
2.8 4motion (AMX)	PR 1KD	Gasolina	4WD	2771	142	193	11.00-05.05	■
2.8 4motion (ATQ)	PR 1KD	Gasolina	4WD	2771	142	193	11.00-05.05	■
1.9 TDI (AVB)	Rim 16	Diesel	FWD	1896	74	101	11.00-05.05	■
1.9 TDI (AVF)	Rim 16	Diesel	FWD	1896	96	130	11.00-05.05	■
1.9 TDI (AWX)	Rim 16	Diesel	FWD	1896	96	130	11.00-05.05	■
1.9 TDI 4motion (AVF)	Rim 16	Diesel	4WD	1896	96	130	11.00-05.05	■
2.0 TDI (BGW)	Rim 16	Diesel	FWD	1968	100	136	12.03-05.05	■
2.0 TDI (BHW)	Rim 16	Diesel	FWD	1968	100	136	12.03-05.05	■
2.5 TDI (AKN)		Diesel	FWD	2496	110	150	11.00-05.05	■
2.5 TDI 4motion (AKN)		Diesel	4WD	2496	110	150	11.00-05.05	■
2.5 TDI (BDG)		Diesel	FWD	2496	120	163	05.03-05.05	■
2.5 TDI 4motion (BAU)		Diesel	4WD	2496	132	180	01.03-05.05	■
2.5 TDI 4motion (BDH)		Diesel	4WD	2496	132	180	01.03-05.05	■