LISTA DE APLICACIONES - BUYERS GUIDE

78BD0560-2

8 424073 193285

Weight: 10.104

O.E.M.	MAKE
517121C050	HYUNDAI

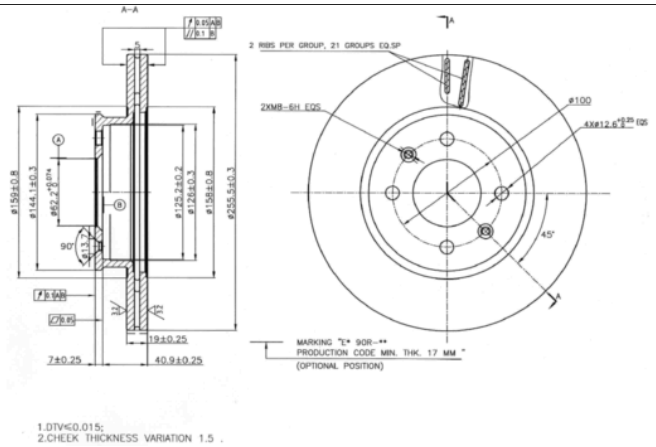

78BD0560-2

E1 90R-02C0452/0026

Ø255.5x19x47.9

MAKE
HYUNDAI

				Trac.	CC	Kw	CV	Front / Rear
HYUNDAI								
GETZ / CLICK / GETZ PRIME / TB (TB) 06.01-01.11								**Hatchback (Supermini car-B Segment)**
1.1 (G4HD)	Rim 14	Gasolina	FWD	1086	46	63	09.02-09.05	■
1.1 (G4HD)	Rim 14	Gasolina	FWD	1086	49	67	09.05-06.09	■
1.3 i (G4EA)	Rim 14	Gasolina	FWD	1341	60	82	09.02-03.04	■
1.3 (G4EA)	Rim 14	Gasolina	FWD	1341	61	83	09.04-06.09	■
1.3 (G4EA)	Rim 14	Gasolina	FWD	1341	63	85	09.03-09.05	■
1.4 i (G4EE)	Rim 14	Gasolina	FWD	1399	71	97	08.05-12.10	■
1.5 i	Rim 14	Gasolina	FWD	1495	73	99	03.03-09.05	■
1.6 (G4ED)	Rim 14	Gasolina	FWD	1599	77	106	09.02-09.05	■
1.6 (G4ED)	Rim 14	Gasolina	FWD	1599	78	106	06.05-06.09	■
1.5 CRDi (D3EA)	Rim 14	Diesel	FWD	1493	60	82	03.03-09.05	■
1.5 CRDi (D4FA)	Rim 14	Diesel	FWD	1493	65	88	08.05-06.09	■
1.5 CRDi GLS (D4FA)	Rim 14	Diesel	FWD	1493	75	102	07.04-08.05	■
1.5 CRDi GLS (D4FA)	Rim 14	Diesel	FWD	1493	81	110	08.05-06.09	■