LISTA DE APLICACIONES - BUYERS GUIDE

31915-4022

8 424073 162663

Weight: 15.053

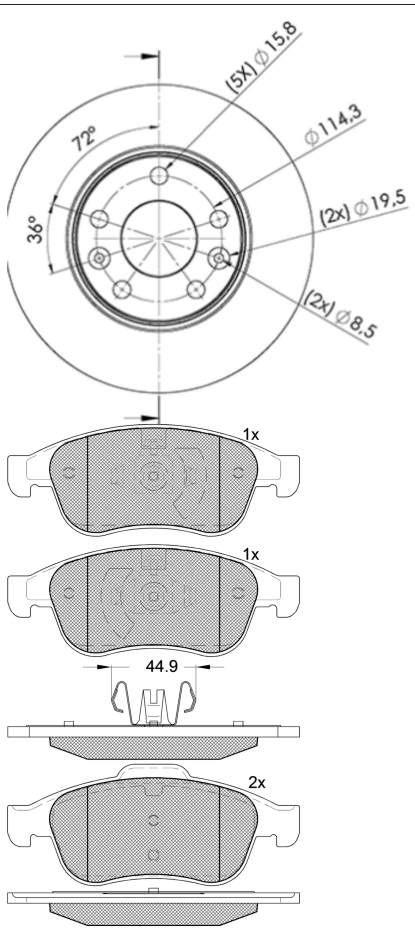

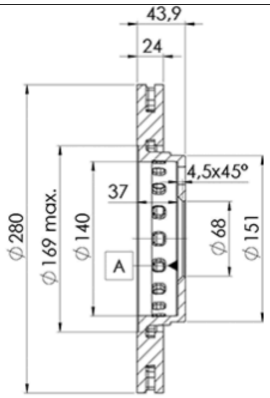

31915-4022

Ate - Teves

155.15x59.46x18
Ø280x24x43.9

WVA
24538
24914

MAKE
DACIA
RENAULT

Front / Rear

			Trac.	CC	Kw	CV		
DACIA								
DUSTER (HS_) 04.11-							**SUV Van (Compact SUV-J Segment)**	
1.5 dCi (K9K 884)		Diesel	FWD	1461	66	90	04.11-	■
1.5 dCi (K9K 884)		Diesel	FWD	1461	66	90	04.11-	■
1.5 dCi (K9K 892)		Diesel	FWD	1461	66	90	04.11-	■
1.5 dCi (K9K 892)		Diesel	FWD	1461	66	90	04.11-	■
1.5 dCi 4x4 (K9K 884)		Diesel	4WD	1461	66	90	04.11-	■
1.5 dCi 4x4 (K9K 884)		Diesel	4WD	1461	66	90	04.11-	■
1.5 dCi 4x4 (K9K 892)		Diesel	4WD	1461	66	90	04.11-	■
1.5 dCi 4x4 (K9K 892)		Diesel	4WD	1461	66	90	04.11-	■
1.5 dCi (K9K 666)		Diesel	FWD	1461	80	109	04.13-	■
1.5 dCi (K9K 666)		Diesel	FWD	1461	80	109	04.13-	■
1.5 dCi (K9K 856)		Diesel	FWD	1461	80	109	04.13-	■
1.5 dCi (K9K 856)		Diesel	FWD	1461	80	109	04.13-	■
1.5 dCi 4x4 (K9K 658)		Diesel	4WD	1461	80	109	04.13-	■
1.5 dCi 4x4 (K9K 658)		Diesel	4WD	1461	80	109	04.13-	■
1.5 dCi 4x4 (K9K 858)		Diesel	4WD	1461	80	109	04.13-	■
1.5 dCi 4x4 (K9K 858)		Diesel	4WD	1461	80	109	04.13-	■
DUSTER (HS_) 04.10-							**SUV (Compact SUV-J Segment)**	
1.6 16V 4x4 (K4M 606)		Gasolina	4WD	1598	77	105	06.10-01.18	■
1.6 16V 4x4 (K4M 606)		Gasolina	4WD	1598	77	105	06.10-01.18	■
1.6 16V LPG (K4M 616)		Gasol./Gas (LPG)	FWD	1598	77	105	04.11-01.18	■
1.6 16V LPG (K4M 616)		Gasol./Gas (LPG)	FWD	1598	77	105	04.11-01.18	■

1.6 16V LPG (K4M 642)	Gasol./Gas (LPG)	FWD	1598	77	105	04.11-01.18	■
1.6 16V LPG (K4M 642)	Gasol./Gas (LPG)	FWD	1598	77	105	04.11-01.18	■
1.6 16V Hi-Flex (K4M 696)	Gasol./Etanol	FWD	1598	77	105	08.10-01.18	■
1.6 16V Hi-Flex (K4M 696)	Gasol./Etanol	FWD	1598	77	105	08.10-01.18	■
1.5 dCi (K9K 796)	Diesel	FWD	1461	63	86	04.10-01.18	■
1.5 dCi (K9K 796)	Diesel	FWD	1461	63	86	04.10-01.18	■
1.5 dCi (K9K 830)	Diesel	FWD	1461	63	86	04.10-01.18	■
1.5 dCi (K9K 830)	Diesel	FWD	1461	63	86	04.10-01.18	■
1.5 dCi (HSAJ) (K9K 612)	Diesel	FWD	1461	66	90	10.10-01.18	■
1.5 dCi (HSAJ) (K9K 612)	Diesel	FWD	1461	66	90	10.10-01.18	■
1.5 dCi (HSAJ) (K9K 884)	Diesel	FWD	1461	66	90	10.10-01.18	■
1.5 dCi (HSAJ) (K9K 884)	Diesel	FWD	1461	66	90	10.10-01.18	■
1.5 dCi (HSAJ) (K9K 892)	Diesel	FWD	1461	66	90	10.10-01.18	■
1.5 dCi (HSAJ) (K9K 892)	Diesel	FWD	1461	66	90	10.10-01.18	■
1.5 dCi 4x4 (K9K 884)	Diesel	4WD	1461	66	90	10.10-01.18	■
1.5 dCi 4x4 (K9K 884)	Diesel	4WD	1461	66	90	10.10-01.18	■
1.5 dCi 4x4 (K9K 894)	Diesel	4WD	1461	66	90	10.10-01.18	■
1.5 dCi 4x4 (K9K 894)	Diesel	4WD	1461	66	90	10.10-01.18	■
1.5 dCi (HSMC) (K9K 896)	Diesel	FWD	1461	79	107	06.10-01.18	■
1.5 dCi (HSMC) (K9K 896)	Diesel	FWD	1461	79	107	06.10-01.18	■
1.5 dCi 4x4	Diesel	4WD	1461	79	107	06.10-	■
1.5 dCi 4x4	Diesel	4WD	1461	79	107	06.10-	■
1.5 dCi (K9K 658)	Diesel	FWD	1461	80	109	08.13-01.18	■
1.5 dCi (K9K 658)	Diesel	FWD	1461	80	109	08.13-01.18	■
1.5 dCi (K9K 666)	Diesel	FWD	1461	80	109	08.13-01.18	■
1.5 dCi (K9K 666)	Diesel	FWD	1461	80	109	08.13-01.18	■
1.5 dCi (K9K 667)	Diesel	FWD	1461	80	109	08.13-01.18	■
1.5 dCi (K9K 667)	Diesel	FWD	1461	80	109	08.13-01.18	■
1.5 dCi (K9K 856)	Diesel	FWD	1461	80	109	08.13-01.18	■
1.5 dCi (K9K 856)	Diesel	FWD	1461	80	109	08.13-01.18	■
1.5 dCi (K9K 858)	Diesel	FWD	1461	80	109	08.13-01.18	■
1.5 dCi (K9K 858)	Diesel	FWD	1461	80	109	08.13-01.18	■
1.5 dCi 4x4 (K9K 658)	Diesel	4WD	1461	80	109	08.13-01.18	■
1.5 dCi 4x4 (K9K 658)	Diesel	4WD	1461	80	109	08.13-01.18	■
1.5 dCi 4x4 (K9K 856)	Diesel	4WD	1461	80	109	08.13-01.18	■
1.5 dCi 4x4 (K9K 856)	Diesel	4WD	1461	80	109	08.13-01.18	■
1.5 dCi 4x4 (K9K 858)	Diesel	4WD	1461	80	109	08.13-01.18	■
1.5 dCi 4x4 (K9K 858)	Diesel	4WD	1461	80	109	08.13-01.18	■
1.5 dCi 4x4 (K9K 898)	Diesel	4WD	1461	80	109	08.13-01.18	■
1.5 dCi 4x4 (K9K 898)	Diesel	4WD	1461	80	109	08.13-01.18	■
1.5 dCi 4x4 (HSMC, HSMD) (K9K 856)	Diesel	4WD	1461	81	110	10.10-01.18	■
1.5 dCi 4x4 (HSMC, HSMD) (K9K 856)	Diesel	4WD	1461	81	110	10.10-01.18	■
1.5 dCi 4x4 (HSMC, HSMD) (K9K 858)	Diesel	4WD	1461	81	110	10.10-01.18	■
1.5 dCi 4x4 (HSMC, HSMD) (K9K 858)	Diesel	4WD	1461	81	110	10.10-01.18	■
1.5 dCi 4x4 (HSMC, HSMD) (K9K 898)	Diesel	4WD	1461	81	110	10.10-01.18	■
1.5 dCi 4x4 (HSMC, HSMD) (K9K 898)	Diesel	4WD	1461	81	110	10.10-01.18	■
RENAULT							
DUSTER (H79_U.S.A.) 09.12-				**Closed Off-Road Vehicle (Compact SUV-J Segment)**			
2.0	Gasolina	FWD	1998	99	135	09.12-	■

2.0	Gasolina	FWD	1998	99	135	09.12-	■
DUSTER (HS_) 01.11-						**SUV (Compact SUV-J Segment)**	
1.6 16V (HSAT) (K4M 616)	Gasolina	FWD	1598	75	102	06.11-05.15	■
1.6 16V (HSAT) (K4M 616)	Gasolina	FWD	1598	75	102	06.11-05.15	■
1.6 16V	Gasolina	FWD	1598	76	104	02.12-12.16	■
1.6 16V	Gasolina	FWD	1598	76	104	02.12-12.16	■
2.0 (F4R 403)	Gasolina	FWD	1998	98	133	02.12-01.18	■
2.0 (F4R 403)	Gasolina	FWD	1998	98	133	02.12-01.18	■
2.0 (F4R 405)	Gasolina	FWD	1998	98	133	02.12-01.18	■
2.0 (F4R 405)	Gasolina	FWD	1998	98	133	02.12-01.18	■
2.0 4x4 (F4R)	Gasolina	4WD	1998	99	135	02.12-01.18	■
2.0 4x4 (F4R)	Gasolina	4WD	1998	99	135	02.12-01.18	■
2.0	Gasolina	FWD	1998	101	137	01.11-	■
2.0	Gasolina	FWD	1998	101	137	01.11-	■
2.0 4x4 (HSAB, HSA3, HSAJ, HSMS)	Gasolina	4WD	1998	101	137	01.11-01.18	■
2.0 4x4 (HSAB, HSA3, HSAJ, HSMS)	Gasolina	4WD	1998	101	137	01.11-01.18	■
2.0	Gasolina	FWD	1998	102	138	10.11-	■
2.0	Gasolina	FWD	1998	102	138	10.11-	■
2.0 Flex	Gasolina	FWD	1998	104	141	01.11-	■
2.0 Flex	Gasolina	FWD	1998	104	141	01.11-	■
2.0 Hi-Flex	Gasolina	FWD	1998	104	141	01.11-	■
2.0 Hi-Flex	Gasolina	FWD	1998	104	141	01.11-	■
2.0 (F4R 402)	Gasolina	FWD	1998	105	142	10.11-01.18	■
2.0 (F4R 402)	Gasolina	FWD	1998	105	142	10.11-01.18	■
2.0 (F4R 403)	Gasolina	FWD	1998	105	142	10.11-01.18	■
2.0 (F4R 403)	Gasolina	FWD	1998	105	142	10.11-01.18	■
2.0 4x4 (F4R 402)	Gasolina	4WD	1998	105	142	10.11-01.18	■
2.0 4x4 (F4R 402)	Gasolina	4WD	1998	105	142	10.11-01.18	■
2.0 4x4 (F4R 403)	Gasolina	4WD	1998	105	142	10.11-01.18	■
2.0 4x4 (F4R 403)	Gasolina	4WD	1998	105	142	10.11-01.18	■
2.0 Flex	Gasolina	FWD	1998	105	142	10.11-	■
2.0 Flex	Gasolina	FWD	1998	105	142	10.11-	■
2.0 Flex	Gasolina	FWD	1998	109	148	01.16-	■
2.0 Flex	Gasolina	FWD	1998	109	148	01.16-	■
2.0 Flex	Gasolina	FWD	1998	109	148	01.16-	■
2.0 Flex	Gasolina	FWD	1998	109	148	01.16-	■
1.5 dCi	Diesel	FWD	1461	63	85	06.11-01.18	■
1.5 dCi	Diesel	FWD	1461	63	85	06.11-01.18	■
1.5 dCi	Diesel	FWD	1461	66	90	06.11-	■
1.5 dCi	Diesel	FWD	1461	66	90	06.11-	■
1.5 dCi	Diesel	RWD	1461	81	110	02.12-	■
1.5 dCi	Diesel	RWD	1461	81	110	02.12-	■
FLUENCE / SYMBOL (L3_) 02.10-						**Saloon (Luxury car-F Segment)**	
1.6 16V (L301, L30F, L30P, L30R) (K4M 838)	Gasolina	FWD	1598	81	110	02.10-	■
1.6 16V (L301, L30F, L30P, L30R) (K4M 838)	Gasolina	FWD	1598	81	110	02.10-	■
1.6 16V (L301, L30F, L30P, L30R) (K4M 839)	Gasolina	FWD	1598	81	110	02.10-	■
1.6 16V (L301, L30F, L30P, L30R) (K4M 839)	Gasolina	FWD	1598	81	110	02.10-	■
1.6 16V (L301, L30P, L30R) (K4M 838)	Gasolina	FWD	1598	82	111	02.10-	■
1.6 16V (L301, L30P, L30R) (K4M 838)	Gasolina	FWD	1598	82	111	02.10-	■
2.0 16V (L30C, L30G, L30T, L30V) (M4R 714)	Gasolina	FWD	1997	103	140	02.10-	■
2.0 16V (L30C, L30G, L30T, L30V) (M4R 714)	Gasolina	FWD	1997	103	140	02.10-	■

2.0 16V (L30C, L30G, L30T, L30V) (M4R 751)	Gasolina	FWD	1997	103	140	02.10-	■
2.0 16V (L30C, L30G, L30T, L30V) (M4R 751)	Gasolina	FWD	1997	103	140	02.10-	■
Z.E. (5AM 400)	Eléctrico	FWD		70	95	02.12-	■
Z.E. (5AM 400)	Eléctrico	FWD		70	95	02.12-	■
1.5 dCi (L30A) (K9K 830)	Diesel	FWD	1461	63	86	02.10-	■
1.5 dCi (L30A) (K9K 830)	Diesel	FWD	1461	63	86	02.10-	■
1.5 dCi (L30S) (K9K 834)	Diesel	FWD	1461	66	90	02.10-	■
1.5 dCi (L30S) (K9K 834)	Diesel	FWD	1461	66	90	02.10-	■
1.5 dCi (L30B) (K9K 832)	Diesel	FWD	1461	78	106	02.10-	■
1.5 dCi (L30B) (K9K 832)	Diesel	FWD	1461	78	106	02.10-	■
1.5 dCi (L30D, L30L, L306, L33F, L33L, L33M, L33V, L33W) (K9K 656)	Diesel	FWD	1461	81	110	02.10-	■
1.5 dCi (L30D, L30L, L306, L33F, L33L, L33M, L33V, L33W) (K9K 656)	Diesel	FWD	1461	81	110	02.10-	■
1.5 dCi (L30D, L30L, L306, L33F, L33L, L33M, L33V, L33W) (K9K 657)	Diesel	FWD	1461	81	110	02.10-	■
1.5 dCi (L30D, L30L, L306, L33F, L33L, L33M, L33V, L33W) (K9K 657)	Diesel	FWD	1461	81	110	02.10-	■
1.5 dCi (L30D, L30L, L306, L33F, L33L, L33M, L33V, L33W) (K9K 836)	Diesel	FWD	1461	81	110	02.10-	■
1.5 dCi (L30D, L30L, L306, L33F, L33L, L33M, L33V, L33W) (K9K 836)	Diesel	FWD	1461	81	110	02.10-	■
1.5 dCi (L30D, L30L, L306, L33F, L33L, L33M, L33V, L33W) (K9K 837)	Diesel	FWD	1461	81	110	02.10-	■
1.5 dCi (L30D, L30L, L306, L33F, L33L, L33M, L33V, L33W) (K9K 837)	Diesel	FWD	1461	81	110	02.10-	■
GRAND SCÉNIC III (JZ0/1_) 02.09-				**MPV (Compact MPV-M1 Segment)**			
1.6 16V (JZ0U) (K4M 858)	Gasolina	FWD	1598	81	109	02.09-09.16	■
1.6 16V (JZ0U) (K4M 858)	Gasolina	FWD	1598	81	109	02.09-09.16	■
1.5 dCi (JZ0A) (K9K 830)	Diesel	FWD	1461	63	86	04.09-09.16	■
1.5 dCi (JZ0A) (K9K 830)	Diesel	FWD	1461	63	86	04.09-09.16	■
MEGANE III (DZ0/1_) 11.08-				**Coupe (Compact car-C Segment)**			
1.2 TCe (DZ2B, DZ11) (H5F 400)	Gasolina	FWD	1198	85	116	03.12-08.15	■
1.2 TCe (DZ2B, DZ11) (H5F 400)	Gasolina	FWD	1198	85	116	03.12-08.15	■
1.2 TCe (DZ2B, DZ11) (H5F 408)	Gasolina	FWD	1198	85	116	03.12-08.15	■
1.2 TCe (DZ2B, DZ11) (H5F 408)	Gasolina	FWD	1198	85	116	03.12-08.15	■
1.4 TCe (DZ0F, DZ1V) (H4J 700)	Gasolina	FWD	1397	96	131	04.09-08.15	■
1.4 TCe (DZ0F, DZ1V) (H4J 700)	Gasolina	FWD	1397	96	131	04.09-08.15	■
1.6 16V (DZ0H) (K4M 848)	Gasolina	FWD	1598	74	101	11.08-08.15	■
1.6 16V (DZ0H) (K4M 848)	Gasolina	FWD	1598	74	101	11.08-08.15	■
1.6 16V (DZ0U, DZ1B, DZ1H) (K4M 858)	Gasolina	FWD	1598	81	110	11.08-08.15	■
1.6 16V (DZ0U, DZ1B, DZ1H) (K4M 858)	Gasolina	FWD	1598	81	110	11.08-08.15	■
2.0 CVT (DZ0G, DZ1E) (M4R 711)	Gasolina	FWD	1997	103	140	05.09-08.15	■
2.0 CVT (DZ0G, DZ1E) (M4R 711)	Gasolina	FWD	1997	103	140	05.09-08.15	■
1.6 16V Bifuel (DZ03, DZ1Y) (K4M 866)	Gasol./Gas (LPG)	FWD	1598	81	110	11.08-08.15	■
1.6 16V Bifuel (DZ03, DZ1Y) (K4M 866)	Gasol./Gas (LPG)	FWD	1598	81	110	11.08-08.15	■
1.5 dCi (DZ0A) (K9K 830)	Diesel	FWD	1461	63	86	11.08-08.15	■
1.5 dCi (DZ0A) (K9K 830)	Diesel	FWD	1461	63	86	11.08-08.15	■
1.5 dCi (DZ0C, DZ1A) (K9K 834)	Diesel	FWD	1461	66	90	11.08-08.15	■
1.5 dCi (DZ0C, DZ1A) (K9K 834)	Diesel	FWD	1461	66	90	11.08-08.15	■
1.5 dCi (DZ0B) (K9K 832)	Diesel	FWD	1461	78	106	02.09-08.15	■
1.5 dCi (DZ0B) (K9K 832)	Diesel	FWD	1461	78	106	02.09-08.15	■
1.5 dCi (DZ09, DZ0D, DZ1F, DZ1G, DZ14, DZ29) (K9K 636)	Diesel	FWD	1461	81	110	02.09-08.15	■

1.5 dCi (DZ09, DZ0D, DZ1F, DZ1G, DZ14, DZ29) (K9K 636)	Diesel	FWD	1461	81	110	02.09-08.15	■
1.5 dCi (DZ09, DZ0D, DZ1F, DZ1G, DZ14, DZ29) (K9K 836)	Diesel	FWD	1461	81	110	02.09-08.15	■
1.5 dCi (DZ09, DZ0D, DZ1F, DZ1G, DZ14, DZ29) (K9K 836)	Diesel	FWD	1461	81	110	02.09-08.15	■
1.5 dCi (DZ09, DZ0D, DZ1F, DZ1G, DZ14, DZ29) (K9K 837)	Diesel	FWD	1461	81	110	02.09-08.15	■
1.5 dCi (DZ09, DZ0D, DZ1F, DZ1G, DZ14, DZ29) (K9K 837)	Diesel	FWD	1461	81	110	02.09-08.15	■
1.5 dCi (DZ09, DZ0D, DZ1F, DZ1G, DZ14, DZ29) (K9K 846)	Diesel	FWD	1461	81	110	02.09-08.15	■
1.5 dCi (DZ09, DZ0D, DZ1F, DZ1G, DZ14, DZ29) (K9K 846)	Diesel	FWD	1461	81	110	02.09-08.15	■
1.6 dCi (DZ00, DZ12, DZ2A, DZ13) (R9M 402)	Diesel	FWD	1598	96	130	04.11-08.15	■
1.6 dCi (DZ00, DZ12, DZ2A, DZ13) (R9M 402)	Diesel	FWD	1598	96	130	04.11-08.15	■
1.9 dCi (DZ0N, DZ0J, DZ1J, DZ1K) (F9Q 870)	Diesel	FWD	1870	96	131	11.08-08.15	■
1.9 dCi (DZ0N, DZ0J, DZ1J, DZ1K) (F9Q 870)	Diesel	FWD	1870	96	131	11.08-08.15	■
1.9 dCi (DZ0N, DZ0J, DZ1J, DZ1K) (F9Q 872)	Diesel	FWD	1870	96	131	11.08-08.15	■
1.9 dCi (DZ0N, DZ0J, DZ1J, DZ1K) (F9Q 872)	Diesel	FWD	1870	96	131	11.08-08.15	■
MEGANE III (BZ0/1_, B3_) 11.08-						**Hatchback (Compact car-C Segment)**	
1.2 TCe (BZ2B, BZ11) (H5F 400)	Gasolina	FWD	1198	85	116	03.12-08.15	■
1.2 TCe (BZ2B, BZ11) (H5F 400)	Gasolina	FWD	1198	85	116	03.12-08.15	■
1.2 TCe (BZ2B, BZ11) (H5F 408)	Gasolina	FWD	1198	85	116	03.12-08.15	■
1.2 TCe (BZ2B, BZ11) (H5F 408)	Gasolina	FWD	1198	85	116	03.12-08.15	■
1.4 TCe (BZ0F, BZ1V) (H4J 700)	Gasolina	FWD	1397	96	131	04.09-08.15	■
1.4 TCe (BZ0F, BZ1V) (H4J 700)	Gasolina	FWD	1397	96	131	04.09-08.15	■
1.6 16V (BZ0H) (K4M 848)	Gasolina	FWD	1598	74	101	11.08-08.15	■
1.6 16V (BZ0H) (K4M 848)	Gasolina	FWD	1598	74	101	11.08-08.15	■
1.6 16V (BZ1B, BZ1H) (K4M 858)	Gasolina	FWD	1598	81	110	11.08-03.17	■
1.6 16V (BZ1B, BZ1H) (K4M 858)	Gasolina	FWD	1598	81	110	11.08-03.17	■
1.6 16V (K4M 858)	Gasolina	FWD	1598	82	111	11.08-01.16	■
1.6 16V (K4M 858)	Gasolina	FWD	1598	82	111	11.08-01.16	■
1.6 16V (K4M 866)	Gasolina	FWD	1598	82	111	11.08-01.16	■
1.6 16V (K4M 866)	Gasolina	FWD	1598	82	111	11.08-01.16	■
2.0 CVT (BZ0G, BZ1P) (M4R 711)	Gasolina	FWD	1997	103	140	02.09-08.15	■
2.0 CVT (BZ0G, BZ1P) (M4R 711)	Gasolina	FWD	1997	103	140	02.09-08.15	■
2.0 CVT (BZ0G, BZ1P) (M4R 713)	Gasolina	FWD	1997	103	140	02.09-08.15	■
2.0 CVT (BZ0G, BZ1P) (M4R 713)	Gasolina	FWD	1997	103	140	02.09-08.15	■
1.6 16V Hi-Flex (BZ03) (K4M 858)	Gasol./Etanol	FWD	1598	81	110	11.08-08.15	■
1.6 16V Hi-Flex (BZ03) (K4M 858)	Gasol./Etanol	FWD	1598	81	110	11.08-08.15	■
1.6 16V Hi-Flex (BZ03) (K4M 866)	Gasol./Etanol	FWD	1598	81	110	11.08-08.15	■
1.6 16V Hi-Flex (BZ03) (K4M 866)	Gasol./Etanol	FWD	1598	81	110	11.08-08.15	■
1.5 dCi (K9K 830)	Diesel	FWD	1461	63	86	11.08-08.15	■
1.5 dCi (K9K 830)	Diesel	FWD	1461	63	86	11.08-08.15	■
1.5 dCi (BZ0C) (K9K 834)	Diesel	FWD	1461	66	90	11.08-08.15	■
1.5 dCi (BZ0C) (K9K 834)	Diesel	FWD	1461	66	90	11.08-08.15	■
1.5 dCi (K9K 832)	Diesel	FWD	1461	78	106	12.08-01.16	■
1.5 dCi (K9K 832)	Diesel	FWD	1461	78	106	12.08-01.16	■
1.5 dCi (BZ09, BZ0D, BZ1W, BZ29, BZ14) (K9K 636)	Diesel	FWD	1461	81	110	02.09-12.15	■
1.5 dCi (BZ09, BZ0D, BZ1W, BZ29, BZ14) (K9K 636)	Diesel	FWD	1461	81	110	02.09-12.15	■
1.5 dCi (BZ09, BZ0D, BZ1W, BZ29, BZ14) (K9K 836)	Diesel	FWD	1461	81	110	02.09-12.15	■

1.5 dCi (BZ09, BZ0D, BZ1W, BZ29, BZ14) (K9K 836)	Diesel	FWD	1461	81	110	02.09-12.15	■
1.5 dCi (BZ09, BZ0D, BZ1W, BZ29, BZ14) (K9K 837)	Diesel	FWD	1461	81	110	02.09-12.15	■
1.5 dCi (BZ09, BZ0D, BZ1W, BZ29, BZ14) (K9K 837)	Diesel	FWD	1461	81	110	02.09-12.15	■
1.5 dCi (BZ09, BZ0D, BZ1W, BZ29, BZ14) (K9K 846)	Diesel	FWD	1461	81	110	02.09-12.15	■
1.5 dCi (BZ09, BZ0D, BZ1W, BZ29, BZ14) (K9K 846)	Diesel	FWD	1461	81	110	02.09-12.15	■
1.6 dCi (BZ00, BZ12, BZ13) (R9M 402)	Diesel	FWD	1598	96	130	04.11-08.15	■
1.6 dCi (BZ00, BZ12, BZ13) (R9M 402)	Diesel	FWD	1598	96	130	04.11-08.15	■
1.6 dCi (BZ00, BZ12, BZ13) (R9M 404)	Diesel	FWD	1598	96	130	04.11-08.15	■
1.6 dCi (BZ00, BZ12, BZ13) (R9M 404)	Diesel	FWD	1598	96	130	04.11-08.15	■
1.9 dCi (BZ0N, BZ0J) (F9Q 870)	Diesel	FWD	1870	96	131	11.08-01.16	■
1.9 dCi (BZ0N, BZ0J) (F9Q 870)	Diesel	FWD	1870	96	131	11.08-01.16	■
1.9 dCi (BZ0N, BZ0J) (F9Q 872)	Diesel	FWD	1870	96	131	11.08-01.16	■
1.9 dCi (BZ0N, BZ0J) (F9Q 872)	Diesel	FWD	1870	96	131	11.08-01.16	■
MEGANE III (B95) 06.09-				**Saloon (Compact car-C Segment)**			
1.6 16V	Gasolina	FWD	1598	82	112	06.09-	■
1.6 16V	Gasolina	FWD	1598	82	112	06.09-	■
MEGANE III Grandtour (KZ0/1) 11.08-				**Estate (Compact car-C Segment)**			
1.2 TCe (KZ2B, KZ11) (H5F 400)	Gasolina	FWD	1198	85	116	03.12-08.15	■
1.2 TCe (KZ2B, KZ11) (H5F 400)	Gasolina	FWD	1198	85	116	03.12-08.15	■
1.2 TCe (KZ2B, KZ11) (H5F 408)	Gasolina	FWD	1198	85	116	03.12-08.15	■
1.2 TCe (KZ2B, KZ11) (H5F 408)	Gasolina	FWD	1198	85	116	03.12-08.15	■
1.4 TCe (KZ0F, KZ1V) (H4J 700)	Gasolina	FWD	1397	96	130	05.09-08.15	■
1.4 TCe (KZ0F, KZ1V) (H4J 700)	Gasolina	FWD	1397	96	130	05.09-08.15	■
1.6 16V (KZ0H) (K4M 848)	Gasolina	FWD	1598	74	101	05.09-08.15	■
1.6 16V (KZ0H) (K4M 848)	Gasolina	FWD	1598	74	101	05.09-08.15	■
1.6 16V (KZ0U, KZ1B, KZ1U) (K4M 858)	Gasolina	FWD	1598	81	110	05.09-08.15	■
1.6 16V (KZ0U, KZ1B, KZ1U) (K4M 858)	Gasolina	FWD	1598	81	110	05.09-08.15	■
1.6 16V (KZ0U, KZ1B, KZ1U) (K4M 866)	Gasolina	FWD	1598	81	110	05.09-08.15	■
1.6 16V (KZ0U, KZ1B, KZ1U) (K4M 866)	Gasolina	FWD	1598	81	110	05.09-08.15	■
2.0 CVT (KZ0G, KZ1P) (M4R 711)	Gasolina	FWD	1997	103	140	05.09-08.15	■
2.0 CVT (KZ0G, KZ1P) (M4R 711)	Gasolina	FWD	1997	103	140	05.09-08.15	■
2.0 CVT (KZ0G, KZ1P) (M4R 713)	Gasolina	FWD	1997	103	140	05.09-08.15	■
2.0 CVT (KZ0G, KZ1P) (M4R 713)	Gasolina	FWD	1997	103	140	05.09-08.15	■
1.6 BiFuel (KZ03) (K4M 866)	Gasol./Gas (LPG)	FWD	1598	81	110	11.08-08.15	■
1.6 BiFuel (KZ03) (K4M 866)	Gasol./Gas (LPG)	FWD	1598	81	110	11.08-08.15	■
1.5 dCi (KZ0C, KZ1A) (K9K 834)	Diesel	FWD	1461	66	90	05.09-08.15	■
1.5 dCi (KZ0C, KZ1A) (K9K 834)	Diesel	FWD	1461	66	90	05.09-08.15	■
1.5 dCi (KZ1M, KZ1W, KZ0R) (K9K 832)	Diesel	FWD	1461	78	106	02.09-08.15	■
1.5 dCi (KZ1M, KZ1W, KZ0R) (K9K 832)	Diesel	FWD	1461	78	106	02.09-08.15	■
1.5 dCi (KZ1M, KZ1W, KZ0R) (K9K 836)	Diesel	FWD	1461	78	106	02.09-08.15	■
1.5 dCi (KZ1M, KZ1W, KZ0R) (K9K 836)	Diesel	FWD	1461	78	106	02.09-08.15	■
1.5 dCi (KZ1M, KZ1W, KZ0R) (K9K 846)	Diesel	FWD	1461	78	106	02.09-08.15	■
1.5 dCi (KZ1M, KZ1W, KZ0R) (K9K 846)	Diesel	FWD	1461	78	106	02.09-08.15	■
1.5 dCi (KZ09, KZ0D, KZ1G, KZ29, KZ14, KZ1W, KZ10, KZ1F,... (K9K 636)	Diesel	FWD	1461	81	110	02.09-08.15	■
1.5 dCi (KZ09, KZ0D, KZ1G, KZ29, KZ14, KZ1W, KZ10, KZ1F,... (K9K 636)	Diesel	FWD	1461	81	110	02.09-08.15	■
1.5 dCi (KZ09, KZ0D, KZ1G, KZ29, KZ14, KZ1W, KZ10, KZ1F,... (K9K 836)	Diesel	FWD	1461	81	110	02.09-08.15	■

1.5 dCi (KZ09, KZ0D, KZ1G, KZ29, KZ14, KZ1W, KZ10, KZ1F,... (K9K 836)	Diesel	FWD	1461	81	110	02.09-08.15	■
1.5 dCi (KZ09, KZ0D, KZ1G, KZ29, KZ14, KZ1W, KZ10, KZ1F,... (K9K 837)	Diesel	FWD	1461	81	110	02.09-08.15	■
1.5 dCi (KZ09, KZ0D, KZ1G, KZ29, KZ14, KZ1W, KZ10, KZ1F,... (K9K 837)	Diesel	FWD	1461	81	110	02.09-08.15	■
1.5 dCi (KZ09, KZ0D, KZ1G, KZ29, KZ14, KZ1W, KZ10, KZ1F,... (K9K 846)	Diesel	FWD	1461	81	110	02.09-08.15	■
1.5 dCi (KZ09, KZ0D, KZ1G, KZ29, KZ14, KZ1W, KZ10, KZ1F,... (K9K 846)	Diesel	FWD	1461	81	110	02.09-08.15	■
1.6 dCi (KZ00, KZ12, KZ13) (R9M 402)	Diesel	FWD	1598	96	130	04.11-08.15	■
1.6 dCi (KZ00, KZ12, KZ13) (R9M 402)	Diesel	FWD	1598	96	130	04.11-08.15	■
1.6 dCi (KZ00, KZ12, KZ13) (R9M 404)	Diesel	FWD	1598	96	130	04.11-08.15	■
1.6 dCi (KZ00, KZ12, KZ13) (R9M 404)	Diesel	FWD	1598	96	130	04.11-08.15	■
1.6 dCi (KZ00, KZ12, KZ13) (R9M 414)	Diesel	FWD	1598	96	130	04.11-08.15	■
1.6 dCi (KZ00, KZ12, KZ13) (R9M 414)	Diesel	FWD	1598	96	130	04.11-08.15	■
1.9 dCi (KZ0J, KZ0N, KZ1S) (F9Q 870)	Diesel	FWD	1870	96	131	05.09-08.15	■
1.9 dCi (KZ0J, KZ0N, KZ1S) (F9Q 870)	Diesel	FWD	1870	96	131	05.09-08.15	■
1.9 dCi (KZ0J, KZ0N, KZ1S) (F9Q 872)	Diesel	FWD	1870	96	131	05.09-08.15	■
1.9 dCi (KZ0J, KZ0N, KZ1S) (F9Q 872)	Diesel	FWD	1870	96	131	05.09-08.15	■
MEGANE III Hatchback Van (BZ_) 11.08-08.15						**Hatchback Van (Compact car-C Segment)**	
1.5 dCi (BZ0C, BZ1A) (K9K 834)	Diesel	FWD	1461	66	90	11.08-08.15	■
1.5 dCi (BZ0C, BZ1A) (K9K 834)	Diesel	FWD	1461	66	90	11.08-08.15	■
1.5 dCi (BZ0D, BZ1G, BZ1F, BZ1M, BZ1W, BZ0R, BZ10) (K9K 836)	Diesel	FWD	1461	81	110	02.09-08.15	■
1.5 dCi (BZ0D, BZ1G, BZ1F, BZ1M, BZ1W, BZ0R, BZ10) (K9K 836)	Diesel	FWD	1461	81	110	02.09-08.15	■
1.5 dCi (BZ0D, BZ1G, BZ1F, BZ1M, BZ1W, BZ0R, BZ10) (K9K 846)	Diesel	FWD	1461	81	110	02.09-08.15	■
1.5 dCi (BZ0D, BZ1G, BZ1F, BZ1M, BZ1W, BZ0R, BZ10) (K9K 846)	Diesel	FWD	1461	81	110	02.09-08.15	■
MEGANE III CC (EZ0/1_) 06.10-						**Convertible (Compact car-C Segment)**	
1.4 TCe (EZ0F, EZ1V) (H4J 700)	Gasolina	FWD	1397	96	131	06.10-08.15	■
1.4 TCe (EZ0F, EZ1V) (H4J 700)	Gasolina	FWD	1397	96	131	06.10-08.15	■
1.6 16V (EZ0U, EZ1U) (K4M 858)	Gasolina	FWD	1598	81	110	06.10-08.15	■
1.6 16V (EZ0U, EZ1U) (K4M 858)	Gasolina	FWD	1598	81	110	06.10-08.15	■
2.0 CVT (EZ0G, EZ1E, EZ1P) (M4R 711)	Gasolina	FWD	1997	103	140	06.10-08.15	■
2.0 CVT (EZ0G, EZ1E, EZ1P) (M4R 711)	Gasolina	FWD	1997	103	140	06.10-08.15	■
2.0 CVT (EZ0G, EZ1E, EZ1P) (M4R 713)	Gasolina	FWD	1997	103	140	06.10-08.15	■
2.0 CVT (EZ0G, EZ1E, EZ1P) (M4R 713)	Gasolina	FWD	1997	103	140	06.10-08.15	■
1.5 dCi (EZ09, EZ1G, EZ0D, EZ14) (K9K 837)	Diesel	FWD	1461	81	110	06.10-08.15	■
1.5 dCi (EZ09, EZ1G, EZ0D, EZ14) (K9K 837)	Diesel	FWD	1461	81	110	06.10-08.15	■
1.9 dCi (EZ0J, EZ1S) (F9Q 870)	Diesel	FWD	1870	96	131	06.10-08.15	■
1.9 dCi (EZ0J, EZ1S) (F9Q 870)	Diesel	FWD	1870	96	131	06.10-08.15	■
SCÉNIC III (JZ0/1_) 12.08-						**MPV (Compact MPV-M1 Segment)**	
1.6 16V (JZ0U, JZ1B) (K4M 858)	Gasolina	FWD	1598	81	110	02.09-09.16	■
1.6 16V (JZ0U, JZ1B) (K4M 858)	Gasolina	FWD	1598	81	110	02.09-09.16	■
1.6 16V (JZ0U, JZ1B) (K4M R 858)	Gasolina	FWD	1598	81	110	02.09-09.16	■
1.6 16V (JZ0U, JZ1B) (K4M R 858)	Gasolina	FWD	1598	81	110	02.09-09.16	■
1.6 E85 (JZ03, JZ1Y) (K4M 866)	Gasol./Etanol	FWD	1598	81	110	02.09-09.16	■
1.6 E85 (JZ03, JZ1Y) (K4M 866)	Gasol./Etanol	FWD	1598	81	110	02.09-09.16	■
1.5 dCi (K9K 830)	Diesel	FWD	1461	63	86	04.09-09.16	■
1.5 dCi (K9K 830)	Diesel	FWD	1461	63	86	04.09-09.16	■
1.5 dCi (K9K 636)	Diesel	FWD	1461	81	110	04.09-09.16	■

1.5 dCi (K9K 636)	Diesel	FWD	1461	81	110	04.09-09.16	■
1.5 dCi (K9K 656)	Diesel	FWD	1461	81	110	04.09-09.16	■
1.5 dCi (K9K 656)	Diesel	FWD	1461	81	110	04.09-09.16	■
1.5 dCi (K9K 657)	Diesel	FWD	1461	81	110	04.09-09.16	■
1.5 dCi (K9K 657)	Diesel	FWD	1461	81	110	04.09-09.16	■
1.5 dCi (K9K 836)	Diesel	FWD	1461	81	110	04.09-09.16	■
1.5 dCi (K9K 836)	Diesel	FWD	1461	81	110	04.09-09.16	■
1.5 dCi (K9K 837)	Diesel	FWD	1461	81	110	04.09-09.16	■
1.5 dCi (K9K 837)	Diesel	FWD	1461	81	110	04.09-09.16	■