LISTA DE APLICACIONES - BUYERS GUIDE

31508-5056

8 424073 162687

Weight: 12.008

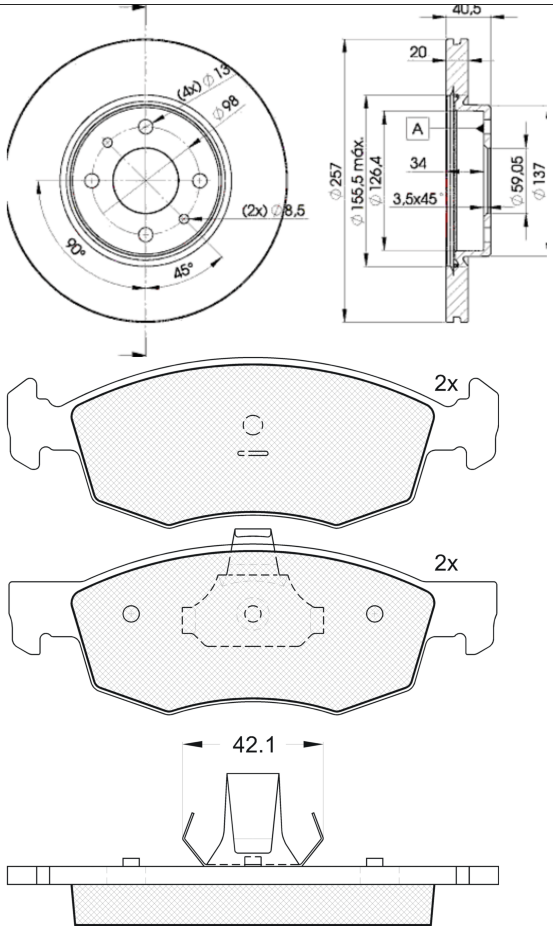

31508-5056

Ate - Teves

150.2x52.6x18
Ø257x20x40.5

WVA
20907
23842

MAKE
FIAT

Front / Rear

FIAT

DOBLO (223_) 11.00-							Box Body/MPV (LCVs-N1 Segment)	Trac.	CC	Kw	CV		Front / Rear
1.2 (223ZXA1A) (223 A5.000)		Gasolina	FWD	1242	48	65	03.01-01.04	■					
1.2 (223ZXA1A) (223 A5.000)		Gasolina	FWD	1242	48	65	03.01-01.04	■					
1.4 (350 A1.000)		Gasolina	FWD	1368	57	77	10.05-	■					
1.4 (350 A1.000)		Gasolina	FWD	1368	57	77	10.05-	■					
1.6 16V (223ZXD1A) (182 B6.000)		Gasolina	FWD	1596	76	103	10.01-	■					
1.6 16V (223ZXD1A) (182 B6.000)		Gasolina	FWD	1596	76	103	10.01-	■					
1.6 Natural Power (182 B6.000)		Gasol./Gas (CNG)	FWD	1596	76	103	09.02-	■					
1.6 Natural Power (182 B6.000)		Gasol./Gas (CNG)	FWD	1596	76	103	09.02-	■					
1.3 JTD 16V (188 A8.000)		Diesel	FWD	1248	51	70	05.04-12.06	■					
1.3 JTD 16V (188 A8.000)		Diesel	FWD	1248	51	70	05.04-12.06	■					
1.3 JTD 16V (188 A9.000)		Diesel	FWD	1248	51	70	05.04-12.06	■					
1.3 JTD 16V (188 A9.000)		Diesel	FWD	1248	51	70	05.04-12.06	■					
1.3 D Multijet (199 A2.000)		Diesel	FWD	1248	55	75	10.05-01.10	■					
1.3 D Multijet (199 A2.000)		Diesel	FWD	1248	55	75	10.05-01.10	■					
1.9 D (223ZXB1A) (223 A6.000)		Diesel	FWD	1910	46	63	03.01-	■					
1.9 D (223ZXB1A) (223 A6.000)		Diesel	FWD	1910	46	63	03.01-	■					
1.9 JTD (223ZXE1A) (182 B9.000)		Diesel	FWD	1910	74	100	10.01-	■					
1.9 JTD (223ZXE1A) (182 B9.000)		Diesel	FWD	1910	74	100	10.01-	■					
1.9 JTD (223 A7.000)		Diesel	FWD	1910	77	105	07.03-	■					
1.9 JTD (223 A7.000)		Diesel	FWD	1910	77	105	07.03-	■					
1.9 JTD (223 B1.000)		Diesel	FWD	1910	77	105	07.03-	■					

1.9 JTD (223 B1.000)	Diesel	FWD	1910	77	105	07.03-	■
DOBLO (119_, 223_) 03.01-						**MPV (Large MPV-M1 Segment)**	
1.2 (223AXA1A) (223 A5.000)	Gasolina	FWD	1242	48	65	03.01-	■
1.2 (223AXA1A) (223 A5.000)	Gasolina	FWD	1242	48	65	03.01-	■
1.4 (350 A1.000)	Gasolina	FWD	1368	57	77	10.05-	■
1.4 (350 A1.000)	Gasolina	FWD	1368	57	77	10.05-	■
1.6	Gasolina	FWD	1596	68	92	09.02-	■
1.6	Gasolina	FWD	1596	68	92	09.02-	■
1.6 16V (223AXD1A) (182 B6.000)	Gasolina	FWD	1596	76	103	10.01-	■
1.6 16V (223AXD1A) (182 B6.000)	Gasolina	FWD	1596	76	103	10.01-	■
1.6 Natural Power (182 B6.000)	Gasol./Gas (CNG)	FWD	1596	76	103	09.02-	■
1.6 Natural Power (182 B6.000)	Gasol./Gas (CNG)	FWD	1596	76	103	09.02-	■
1.3 JTD 16V (188 A9.000)	Diesel	FWD	1248	51	70	12.04-05.05	■
1.3 JTD 16V (188 A9.000)	Diesel	FWD	1248	51	70	12.04-05.05	■
1.3 JTD (199 A2.000)	Diesel	FWD	1248	55	75	05.05-	■
1.3 JTD (199 A2.000)	Diesel	FWD	1248	55	75	05.05-	■
1.3 D Multijet (223 A9.000)	Diesel	FWD	1248	62	84	10.05-	■
1.3 D Multijet (223 A9.000)	Diesel	FWD	1248	62	84	10.05-	■
1.9 D (223AXB1A) (223 A6.000)	Diesel	FWD	1910	46	63	03.01-	■
1.9 D (223AXB1A) (223 A6.000)	Diesel	FWD	1910	46	63	03.01-	■
1.9 JTD (223AXE1A) (182 B9.000)	Diesel	FWD	1910	74	100	10.01-	■
1.9 JTD (223AXE1A) (182 B9.000)	Diesel	FWD	1910	74	100	10.01-	■
1.9 JTD (223AXE1A) (223 B2.000)	Diesel	FWD	1910	74	100	10.01-	■
1.9 JTD (223AXE1A) (223 B2.000)	Diesel	FWD	1910	74	100	10.01-	■
1.9 JTD (223 A7.000)	Diesel	FWD	1910	77	105	07.03-	■
1.9 JTD (223 A7.000)	Diesel	FWD	1910	77	105	07.03-	■
1.9 JTD (223 B1.000)	Diesel	FWD	1910	77	105	07.03-	■
1.9 JTD (223 B1.000)	Diesel	FWD	1910	77	105	07.03-	■
1.9 D Multijet (186 A9.000)	Diesel	FWD	1910	88	120	10.05-	■
1.9 D Multijet (186 A9.000)	Diesel	FWD	1910	88	120	10.05-	■
PALIO Weekend (178_, 173_, 373_, 374_, 171_) 04.96-						**Estate (Supermini car-B Segment)**	
1.2 (178DYA1A, 178DXS1A) (178 C4.066)	Gasolina	FWD	1242	44	60	07.97-10.04	■
1.2 (178DYA1A, 178DXS1A) (178 C4.066)	Gasolina	FWD	1242	44	60	07.97-10.04	■
1.2 (178DYA1A, 178DXS1A) (188 A4.000)	Gasolina	FWD	1242	44	60	07.97-10.04	■
1.2 (178DYA1A, 178DXS1A) (188 A4.000)	Gasolina	FWD	1242	44	60	07.97-10.04	■
1.3 (178DYE1A, 178DYE1AAP, 178DYE1AAT) (178 D6.011)	Gasolina	FWD	1242	59	80	09.01-10.04	■
1.3 (178DYE1A, 178DYE1AAP, 178DYE1AAT) (178 D6.011)	Gasolina	FWD	1242	59	80	09.01-10.04	■
1.3 (178DYE1A, 178DYE1AAP, 178DYE1AAT) (188 A5.000)	Gasolina	FWD	1242	59	80	09.01-10.04	■
1.3 (178DYE1A, 178DYE1AAP, 178DYE1AAT) (188 A5.000)	Gasolina	FWD	1242	59	80	09.01-10.04	■
1.6 16V (182 B6.000)	Gasolina	FWD	1596	76	103	02.01-01.12	■
1.6 16V (182 B6.000)	Gasolina	FWD	1596	76	103	02.01-01.12	■
1.9 D (223 A6.000)	Diesel	FWD	1910	46	63	03.01-	■
1.9 D (223 A6.000)	Diesel	FWD	1910	46	63	03.01-	■