# LISTA DE APLICACIONES - BUYERS GUIDE

## 30787-4250

8 424073 103147

**Weight: 12.440**

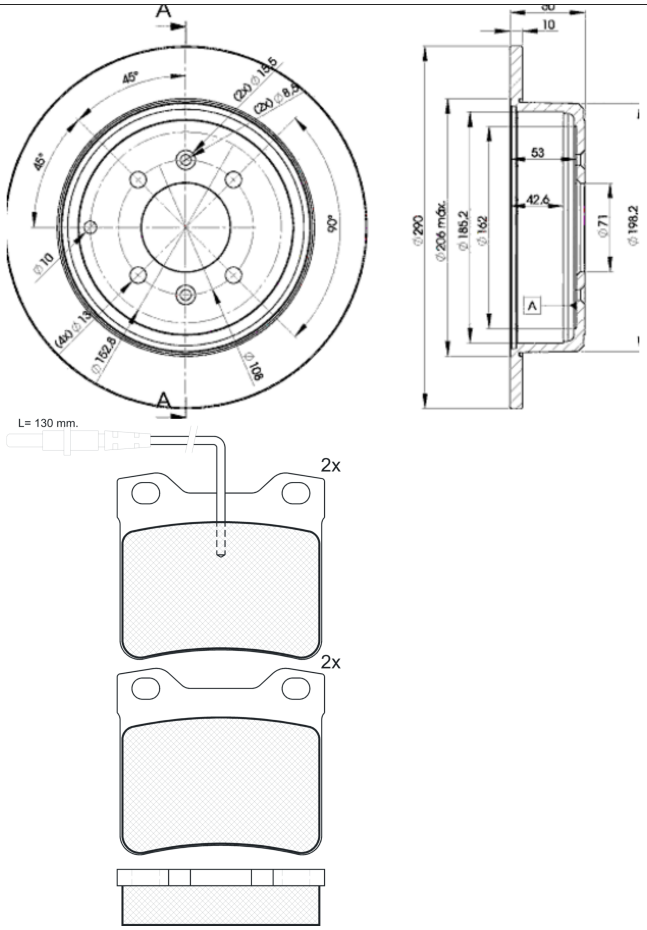


## 30787-4250

Ate - Teves

63.6x57.1x17

Ø290x10x60

| WVA |
|---|
| 21278 |

| MAKE |
|---|
| PEUGEOT |

Front / Rear

| | | | Trac. | CC | Kw | CV | | |
|---|---|---|---|---|---|---|---|---|
| **PEUGEOT** | | | | | | | | |
| **406 (8C) 03.97-02.05** | | | | | **Coupe (Large family car-D Segment)** | | | |
| 1.8 | | Gasolina | FWD | 1761 | 82 | 112 | 10.97-03.99 | ■ |
| 1.8 | | Gasolina | FWD | 1761 | 82 | 112 | 10.97-03.99 | ■ |
| 2.0 16V (RFR (EW10J4)) | | Gasolina | FWD | 1997 | 99 | 135 | 01.99-10.00 | ■ |
| 2.0 16V (RFR (EW10J4)) | | Gasolina | FWD | 1997 | 99 | 135 | 01.99-10.00 | ■ |
| 2.0 16V (RFN (EW10J4)) | | Gasolina | FWD | 1997 | 100 | 136 | 10.00-12.04 | ■ |
| 2.0 16V (RFN (EW10J4)) | | Gasolina | FWD | 1997 | 100 | 136 | 10.00-12.04 | ■ |
| 2.0 16V (RFV (XU10J4R)) | | Gasolina | FWD | 1997 | 100 | 136 | 10.00-12.04 | ■ |
| 2.0 16V (RFV (XU10J4R)) | | Gasolina | FWD | 1997 | 100 | 136 | 10.00-12.04 | ■ |
| 2.0 16V (RFV (XU10J4R)) | | Gasolina | FWD | 1998 | 97 | 132 | 03.97-12.04 | ■ |
| 2.0 16V (RFV (XU10J4R)) | | Gasolina | FWD | 1998 | 97 | 132 | 03.97-12.04 | ■ |
| 2.2 (3FZ (EW12J4)) | | Gasolina | FWD | 2230 | 116 | 158 | 03.02-12.04 | ■ |
| 2.2 (3FZ (EW12J4)) | | Gasolina | FWD | 2230 | 116 | 158 | 03.02-12.04 | ■ |
| 3.0 V6 24V (XFZ (ES9J4)) | | Gasolina | FWD | 2946 | 140 | 190 | 03.97-12.04 | ■ |
| 3.0 V6 24V (XFZ (ES9J4)) | | Gasolina | FWD | 2946 | 140 | 190 | 03.97-12.04 | ■ |
| 3.0 V6 (XFX (ES9J4S)) | | Gasolina | FWD | 2946 | 152 | 207 | 03.00-12.04 | ■ |
| 3.0 V6 (XFX (ES9J4S)) | | Gasolina | FWD | 2946 | 152 | 207 | 03.00-12.04 | ■ |
| 2.2 HDi (4HX (DW12TED4)) | -12/03 | Diesel | FWD | 2179 | 98 | 133 | 03.00-12.04 | ■ |
| 2.2 HDi (4HX (DW12TED4)) | -12/03 | Diesel | FWD | 2179 | 98 | 133 | 03.00-12.04 | ■ |
| **406 (8E/F) 10.96-10.04** | | | | | **Estate (Large family car-D Segment)** | | | |
| 1.8 16V (6FZ (EW7J4)) | -12/03 | Gasolina | FWD | 1749 | 85 | 116 | 10.00-10.04 | ■ |
| 1.8 16V (6FZ (EW7J4)) | -12/03 | Gasolina | FWD | 1749 | 85 | 116 | 10.00-10.04 | ■ |
| 2.0 16V (RFR (EW10J4)) | | Gasolina | FWD | 1997 | 99 | 135 | 01.99-10.00 | ■ |
| 2.0 16V (RFR (EW10J4)) | | Gasolina | FWD | 1997 | 99 | 135 | 01.99-10.00 | ■ |

| | | | | | | | | |
|---|---|---|---|---|---|---|---|---|
| 2.0 16V (RFN (EW10J4)) | -12/03 | Gasolina | FWD | 1997 | 100 | 136 | 10.00-10.04 | ■ |
| 2.0 16V (RFN (EW10J4)) | -12/03 | Gasolina | FWD | 1997 | 100 | 136 | 10.00-10.04 | ■ |
| 2.0 16V HPi (RLZ (EW10D)) | -12/03 | Gasolina | FWD | 1997 | 103 | 140 | 05.01-10.04 | ■ |
| 2.0 16V HPi (RLZ (EW10D)) | -12/03 | Gasolina | FWD | 1997 | 103 | 140 | 05.01-10.04 | ■ |
| 2.0 16V (RFV (XU10J4R)) | -12/03 | Gasolina | FWD | 1998 | 97 | 132 | 10.96-10.04 | ■ |
| 2.0 16V (RFV (XU10J4R)) | -12/03 | Gasolina | FWD | 1998 | 97 | 132 | 10.96-10.04 | ■ |
| 2.0 Turbo (RGX (XU10J2TE)) | 01/97- | Gasolina | FWD | 1998 | 108 | 147 | 10.96-10.04 | ■ |
| 2.0 Turbo (RGX (XU10J2TE)) | 01/97- | Gasolina | FWD | 1998 | 108 | 147 | 10.96-10.04 | ■ |
| 2.2 (3FZ (EW12J4)) | -12/03 | Gasolina | FWD | 2230 | 116 | 158 | 07.00-10.04 | ■ |
| 2.2 (3FZ (EW12J4)) | -12/03 | Gasolina | FWD | 2230 | 116 | 158 | 07.00-10.04 | ■ |
| 3.0 24V (XFZ (ES9J4)) | -12/03 | Gasolina | FWD | 2946 | 140 | 190 | 10.96-10.04 | ■ |
| 3.0 24V (XFZ (ES9J4)) | -12/03 | Gasolina | FWD | 2946 | 140 | 190 | 10.96-10.04 | ■ |
| 3.0 V6 (XFX (ES9J4S)) | -12/03 | Gasolina | FWD | 2946 | 152 | 207 | 03.00-10.04 | ■ |
| 3.0 V6 (XFX (ES9J4S)) | -12/03 | Gasolina | FWD | 2946 | 152 | 207 | 03.00-10.04 | ■ |
| 2.0 HDI 90 (RHY (DW10TD)) | | Diesel | FWD | 1997 | 66 | 90 | 02.99-10.04 | ■ |
| 2.0 HDI 90 (RHY (DW10TD)) | | Diesel | FWD | 1997 | 66 | 90 | 02.99-10.04 | ■ |
| 2.0 HDI 110 (RHS (DW10ATED)) | -12/03 | Diesel | FWD | 1997 | 79 | 107 | 08.01-10.04 | ■ |
| 2.0 HDI 110 (RHS (DW10ATED)) | -12/03 | Diesel | FWD | 1997 | 79 | 107 | 08.01-10.04 | ■ |
| 2.0 HDI 110 (RHZ (DW10ATED)) | -12/03 | Diesel | FWD | 1997 | 79 | 107 | 08.01-10.04 | ■ |
| 2.0 HDI 110 (RHZ (DW10ATED)) | -12/03 | Diesel | FWD | 1997 | 79 | 107 | 08.01-10.04 | ■ |
| 2.0 HDI 110 (RHZ (DW10ATED)) | | Diesel | FWD | 1997 | 80 | 109 | 02.99-04.04 | ■ |
| 2.0 HDI 110 (RHZ (DW10ATED)) | | Diesel | FWD | 1997 | 80 | 109 | 02.99-04.04 | ■ |
| 2.1 TD 12V (P8C (XUD11BTE)) | -12/99 | Diesel | FWD | 2088 | 80 | 109 | 10.96-10.04 | ■ |
| 2.1 TD 12V (P8C (XUD11BTE)) | -12/99 | Diesel | FWD | 2088 | 80 | 109 | 10.96-10.04 | ■ |
| 2.2 HDi (4HX (DW12TED4)) | -12/03 | Diesel | FWD | 2179 | 98 | 133 | 03.00-10.04 | ■ |
| 2.2 HDi (4HX (DW12TED4)) | -12/03 | Diesel | FWD | 2179 | 98 | 133 | 03.00-10.04 | ■ |
| **406 (8B) 08.95-01.05** | | | | | | | **Saloon (Large family car-D Segment)** | |
| 1.8 16V (6FZ (EW7J4)) | -12/00 | Gasolina | FWD | 1749 | 85 | 116 | 10.00-05.04 | ■ |
| 1.8 16V (6FZ (EW7J4)) | -12/00 | Gasolina | FWD | 1749 | 85 | 116 | 10.00-05.04 | ■ |
| 2.0 16V (RFR (EW10J4)) | | Gasolina | FWD | 1997 | 99 | 135 | 01.99-08.00 | ■ |
| 2.0 16V (RFR (EW10J4)) | | Gasolina | FWD | 1997 | 99 | 135 | 01.99-08.00 | ■ |
| 2.0 16V (RFN (EW10J4)) | -12/03 | Gasolina | FWD | 1997 | 100 | 136 | 08.00-06.04 | ■ |
| 2.0 16V (RFN (EW10J4)) | -12/03 | Gasolina | FWD | 1997 | 100 | 136 | 08.00-06.04 | ■ |
| 2.0 16V (RFV (XU10J4R)) | -12/03 | Gasolina | FWD | 1998 | 97 | 132 | 11.95-05.04 | ■ |
| 2.0 16V (RFV (XU10J4R)) | -12/03 | Gasolina | FWD | 1998 | 97 | 132 | 11.95-05.04 | ■ |
| 2.0 (RGY (XU10J2TE)) | | Gasolina | FWD | 1998 | 104 | 141 | 11.96-03.99 | ■ |
| 2.0 (RGY (XU10J2TE)) | | Gasolina | FWD | 1998 | 104 | 141 | 11.96-03.99 | ■ |
| 2.0 Turbo (RGX (XU10J2TE)) | 01/97- | Gasolina | FWD | 1998 | 108 | 147 | 04.96-05.04 | ■ |
| 2.0 Turbo (RGX (XU10J2TE)) | 01/97- | Gasolina | FWD | 1998 | 108 | 147 | 04.96-05.04 | ■ |
| 2.2 (3FZ (EW12J4)) | -12/03 | Gasolina | FWD | 2230 | 116 | 158 | 07.00-05.04 | ■ |
| 2.2 (3FZ (EW12J4)) | -12/03 | Gasolina | FWD | 2230 | 116 | 158 | 07.00-05.04 | ■ |
| 3.0 24V (XFZ (ES9J4)) | -12/03 | Gasolina | FWD | 2946 | 140 | 190 | 10.96-05.04 | ■ |
| 3.0 24V (XFZ (ES9J4)) | -12/03 | Gasolina | FWD | 2946 | 140 | 190 | 10.96-05.04 | ■ |
| 3.0 V6 (XFX (ES9J4S)) | -12/03 | Gasolina | FWD | 2946 | 152 | 207 | 03.00-05.04 | ■ |
| 3.0 V6 (XFX (ES9J4S)) | -12/03 | Gasolina | FWD | 2946 | 152 | 207 | 03.00-05.04 | ■ |
| 2.0 HDI 110 (RHZ (DW10ATED)) | -12/98 | Diesel | FWD | 1997 | 80 | 109 | 06.98-08.01 | ■ |
| 2.0 HDI 110 (RHZ (DW10ATED)) | -12/98 | Diesel | FWD | 1997 | 80 | 109 | 06.98-08.01 | ■ |
| 2.1 TD 12V (P8C (XUD11BTE)) | -12/99 | Diesel | FWD | 2088 | 80 | 109 | 01.96-05.04 | ■ |
| 2.1 TD 12V (P8C (XUD11BTE)) | -12/99 | Diesel | FWD | 2088 | 80 | 109 | 01.96-05.04 | ■ |
| 2.2 HDi (4HX (DW12TED4)) | -12/03 | Diesel | FWD | 2179 | 98 | 133 | 03.00-05.04 | ■ |
| 2.2 HDi (4HX (DW12TED4)) | -12/03 | Diesel | FWD | 2179 | 98 | 133 | 03.00-05.04 | ■ |