LISTA DE APLICACIONES - BUYERS GUIDE

182485

8 424073 289315

Qty: 300 Weight: 2.620

O.E.M.	MAKE
992 698 075 F	PORSCHE
992 698 151 G	PORSCHE
9P1 698 151	PORSCHE
9P1 698 151 A	PORSCHE
9P1 698 151 B	PORSCHE
9P1 698 151 C	PORSCHE

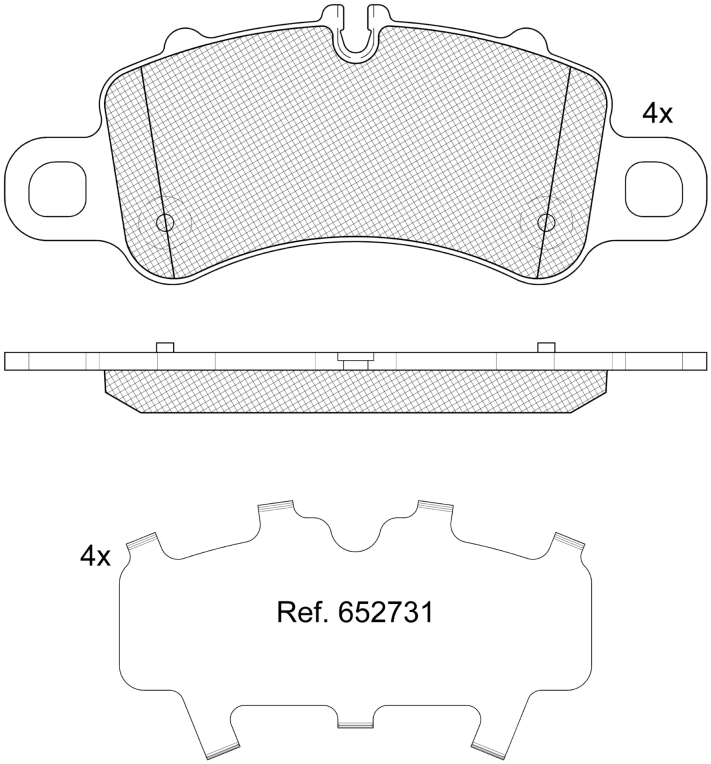

182485

E 9 90R-02A0111/4969

Brembo

199.3x79.4x17.8

WVA	FMSI
25983	D1905-9133
	D1905-9711

MAKE
PORSCHE

			Trac.	CC	Kw	CV		Front / Rear
PORSCHE								
718 BOXSTER (982) 04.16-								**Convertible (Sports car-S Segment)**
2.0 (982320, 982321)	PR 009	Gasolina	RWD	1988	184	250	04.16-	■
2.5 S (982330, 982331) (MDD.NC)	not ceramic brakes	Gasolina	RWD	2497	257	350	04.16-	■
2.5 GTS (982340, 982341, 982380) (MDJ.UA)		Gasolina	RWD	2497	269	365	10.17-	■
2.5 GTS (982340, 982341, 982380) (MDJ.UB)		Gasolina	RWD	2497	269	365	10.17-	■
718 BOXSTER Spyder (982) 07.19-								**Convertible (Sports car-S Segment)**
4.0 (982510, 982511) (DKDA)	not ceramic brakes	Gasolina	RWD	3995	309	420	07.19-	■
718 CAYMAN (982) 04.16-								**Coupe (Sports car-S Segment)**
S 2.5 (982130, 982131) (DPHA)	not ceramic brakes	Gasolina	RWD	2497	257	350	04.16-	■
S 2.5 (982130, 982131) (MDD.NC)	not ceramic brakes	Gasolina	RWD	2497	257	350	04.16-	■
2.5 GTS (982140, 982141) (DPHB)		Gasolina	RWD	2497	269	365	10.17-	■
2.5 GTS (982140, 982141) (MDJ.UA)		Gasolina	RWD	2497	269	365	10.17-	■
2.5 GTS (982140, 982141) (MDJ.UB)		Gasolina	RWD	2497	269	365	10.17-	■
4.0 GT4 (982810, 982811) (DKDA)	not ceramic brakes	Gasolina	RWD	3995	309	420	07.19-	■
911 (991) 03.12-								**Convertible (Sports car-S Segment)**
3.0 Carrera (DCKA)	not ceramic brakes	Gasolina	RWD	2981	272	370	11.15-12.19	■
3.0 Carrera (MDC.KA)	not ceramic brakes	Gasolina	RWD	2981	272	370	11.15-12.19	■
3.0 Carrera 4 (DCKA)	not ceramic brakes	Gasolina	4WD	2981	272	370	11.15-12.19	■
3.0 Carrera 4 (MDC.KA)	not ceramic brakes	Gasolina	4WD	2981	272	370	11.15-12.19	■
3.0 Carrera (992310) (DRTA)	PR 1LS, PR A8C	Gasolina	RWD	2981	283	385	01.19-12.24	■
3.0 Carrera 4 (992610) (DRTA)	PR 1LS, not ceramic brakes	Gasolina	4WD	2981	283	385	01.19-12.24	■
3.0 Carrera 4S (DCHA)		Gasolina	4WD	2981	309	420	11.15-12.19	■
3.0 Carrera 4S (MDC.HA)		Gasolina	4WD	2981	309	420	11.15-12.19	■

3.0 Carrera S (DCHA)		Gasolina	RWD	2981	309	420	11.15-12.19	■
3.0 Carrera S (MDC.HA)		Gasolina	RWD	2981	309	420	11.15-12.19	■
3.0 Carrera 4 GTS (MDC.JA)	not ceramic brakes	Gasolina	4WD	2981	331	450	03.17-12.19	■
3.0 Carrera 4 S (992620) (DKKA)	PR 1LS, PR A8C	Gasolina	4WD	2981	331	450	01.19-12.24	■
3.0 Carrera 4 S (992620) (DRVA)	PR 1LS, PR A8C	Gasolina	4WD	2981	331	450	01.19-12.24	■
3.0 Carrera GTS (MDC.JA)	not ceramic brakes	Gasolina	RWD	2981	331	450	03.17-12.19	■
3.0 Carrera S (992320) (DKKA)	PR 1LS, PR A8C	Gasolina	RWD	2981	331	450	01.19-12.24	■
3.0 Carrera S (992320) (DRVA)	PR 1LS, PR A8C	Gasolina	RWD	2981	331	450	01.19-12.24	■
3.4 Carrera (MA1.04)		Gasolina	RWD	3436	257	350	03.12-12.19	■
3.4 Carrera (MAB.04)		Gasolina	RWD	3436	257	350	03.12-12.19	■
3.8 Turbo S (992650)	PR 1LS, PR A8C	Gasolina	4WD	3745	478	650	03.20-05.24	■
911 (991) 05.11-12.20							**Coupe (Sports car-S Segment)**	
3.0 Carrera (DCKA)	not ceramic brakes	Gasolina	RWD	2981	272	370	11.15-12.19	■
3.0 Carrera (MDC.KA)	not ceramic brakes	Gasolina	RWD	2981	272	370	11.15-12.19	■
3.0 Carrera 4 (DCKA)	not ceramic brakes	Gasolina	4WD	2981	272	370	11.15-12.19	■
3.0 Carrera 4 (MDC.KA)	not ceramic brakes	Gasolina	4WD	2981	272	370	11.15-12.19	■
3.0 Carrera T (DCKA)	not ceramic brakes	Gasolina	RWD	2981	272	370	01.18-12.19	■
3.0 Carrera T (MDC.KA)	not ceramic brakes	Gasolina	RWD	2981	272	370	01.18-12.19	■
3.0 Carrera (992110) (DRTA)	PR 1LS	Gasolina	RWD	2981	283	385	01.19-12.24	■
3.0 Carrera 4 (992410) (DRTA)	PR 1LS	Gasolina	4WD	2981	283	385	01.19-12.24	■
3.0 Carrera T (992150)	PR 1LS	Gasolina	RWD	2981	283	385	04.22-12.24	■
3.0 Carrera 4S (DCHA)		Gasolina	4WD	2981	309	420	11.15-12.19	■
3.0 Carrera 4S (MDC.HA)		Gasolina	4WD	2981	309	420	11.15-12.19	■
3.0 Carrera S (DCHA)		Gasolina	RWD	2981	309	420	11.15-12.19	■
3.0 Carrera S (MDC.HA)		Gasolina	RWD	2981	309	420	11.15-12.19	■
3.0 Carrera 4 GTS (MDC.JA)	not ceramic brakes	Gasolina	4WD	2981	331	450	03.17-12.19	■
3.0 Carrera 4 S (992420) (DKKA)	PR 1LS	Gasolina	4WD	2981	331	450	01.19-12.24	■
3.0 Carrera 4 S (992420) (DRVA)	PR 1LS	Gasolina	4WD	2981	331	450	01.19-12.24	■
3.0 Carrera GTS (MDC.JA)		Gasolina	RWD	2981	331	450	03.17-12.19	■
3.0 Carrera S (992120) (DKKA)	PR 1LS	Gasolina	RWD	2981	331	450	01.19-12.24	■
3.0 Carrera S (992120) (DRVA)	PR 1LS	Gasolina	RWD	2981	331	450	01.19-12.24	■
3.0 Carrera 4 GTS (992440)		Gasolina	4WD	2981	353	480	01.21-12.24	■
3.0 Carrera GTS (992140)		Gasolina	RWD	2981	353	480	01.21-12.24	■
3.4 Carrera (MA1.04)	not ceramic brakes	Gasolina	RWD	3436	257	350	12.11-12.19	■
3.4 Carrera (MAB.04)	not ceramic brakes	Gasolina	RWD	3436	257	350	12.11-12.19	■
3.8 Sport Classic (992130)	PR 1LS, PR A8C	Gasolina	RWD	3745	405	551	01.21-05.25	■
911 (991) 05.14-							**Targa (Sports car-S Segment)**	
3.0 Carrera 4 (DCKA)	not ceramic brakes	Gasolina	4WD	2981	272	370	11.15-12.19	■
3.0 Carrera 4 (MDC.KA)	not ceramic brakes	Gasolina	4WD	2981	272	370	11.15-12.19	■
4 (992510) (DRTA)	PR 1LS, PR A8C	Gasolina	4WD	2981	283	385	05.20-12.24	■
4S (992520) (DRVA)	PR 1LS	Gasolina	4WD	2981	331	450	05.20-12.24	■
4 GTS (992540)	PR 1LS, PR A8C	Gasolina	4WD	2981	353	480	01.21-12.24	■