LISTA DE APLICACIONES - BUYERS GUIDE

182018

8 424073 104823

Qty: 300 **Weight: 2.755**

O.E.M.	MAKE
3C0 698 151 E	VW
3C0 698 151 F	VW
3C0 698 151 G	VW
3C0 698 151 H	VW
3Q0 698 151 B	AUDI
5Q0 698 151 G	VW
5Q0 698 151 L	VW
5QJ 698 151	SKODA (SVW)
7N0 698 151 A	VW
7N0 698 151 B	VW
7N0 698 151 C	SEAT
7N0 698 151 D	VW
7N0 698 151 E	VW
7N0 698 151 F	VW
8V0 698 151 C	SKODA
JZW 698 151 AT	VW
L5QJ 698 151	AUDI (FAW)

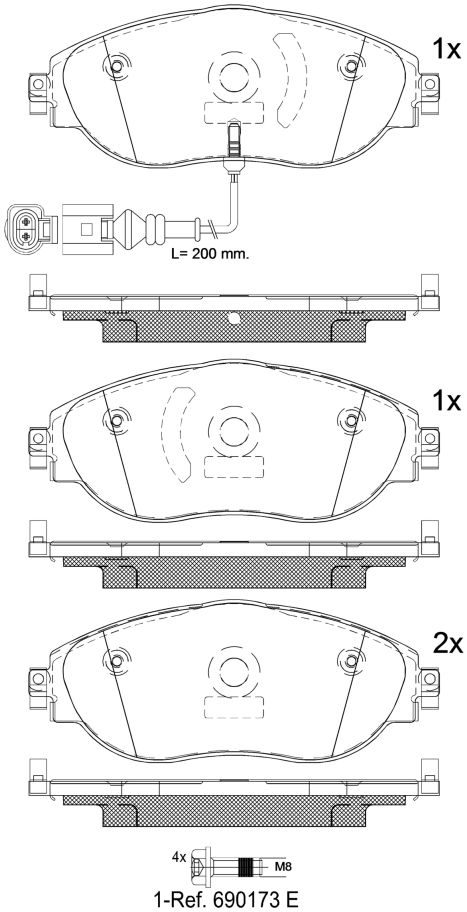

182018

E 9 90R-02A0111/3181

Trw

175.1x69.6x20

WVA	FMSI
24738	D1633-8849
25217	

MAKE
AUDI
AUDI (FAW)
CUPRA
HYUNDAI
MERCEDES-BENZ (BBDC)
SEAT
SKODA
SKODA (SVW)
VW
VW (SVW)

				Trac.	CC	Kw	CV		Front / Rear
AUDI									
A3 III (8V7, 8VE) 10.13-						**Convertible (Compact executive car-D Segment)**			
1.4 TSI (CZEA)	discØ 340, PR S3, PR 1LJ, PR 1LC	Gasolina	FWD		1395	110	150	05.14-10.20	■
1.8 TFSI (CNSB)	discØ 340, PR S3, PR 1LJ, PR 1LC	Gasolina	FWD		1798	125	170	05.14-10.20	■
S3 quattro (CJXF)	discØ 340, PR S3, PR 1LJ, PR 1LC	Gasolina	4WD		1984	210	286	03.14-07.16	■
S3 quattro (DJHB)		Gasolina	4WD		1984	213	290	07.16-10.20	■
S3 quattro (CJXC)		Gasolina	4WD		1984	221	300	04.14-10.20	■
S3 quattro (DNUE)		Gasolina	4WD		1984	221	300	04.14-10.20	■
S3 quattro (DJHA)	discØ 340, PR S3, PR 1LJ, PR 1LC	Gasolina	4WD		1984	228	310	07.16-10.20	■
2.0 TDI (CRLC)	discØ 340, PR S3, PR 1LJ, PR 1LC	Diesel	FWD		1968	100	136	10.13-07.16	■
2.0 TDI (CUNA)	discØ 340, PR S3, PR 1LJ, PR 1LC	Diesel	FWD		1968	135	184	05.14-07.16	■
2.0 TDI quattro (CUNA)	discØ 340, PR S3, PR 1LJ, PR 1LC	Diesel	4WD		1968	135	184	05.14-10.20	■
2.0 TDI quattro (DGCA)	discØ 340, PR S3, PR 1LJ, PR 1LC	Diesel	4WD		1968	135	184	05.14-10.20	■
A3 III (8V1, 8VK) 04.12-						**Hatchback (Compact executive car-D Segment)**			
S3 quattro (CJXB)	discØ 340, PR S3, PR 1LJ, PR 1LC	Gasolina	4WD		1984	206	280	02.13-07.14	■
S3 quattro (CJXF)	discØ 340, PR S3, PR 1LJ, PR 1LC	Gasolina	4WD		1984	210	286	05.14-08.16	■
S3 quattro (CJXD)	discØ 340, PR S3, PR 1LJ, PR 1LC	Gasolina	4WD		1984	213	290	07.16-12.17	■
S3 quattro (DJHB)	discØ 340, PR S3, PR 1LJ, PR 1LC	Gasolina	4WD		1984	213	290	07.16-12.17	■

S3 quattro (CJXC)	discØ 340, PR S3, PR 1LJ, PR 1LC	Gasolina	4WD	1984	221	300	11.12-08.16	■
S3 quattro (CJXG)	discØ 340, PR S3, PR 1LJ, PR 1LC	Gasolina	4WD	1984	228	310	06.16-12.17	■
S3 quattro (DJHA)	discØ 340, PR S3, PR 1LJ, PR 1LC	Gasolina	4WD	1984	228	310	06.16-12.17	■
A3 III (8VS, 8VM) 05.13-							**Saloon (Compact executive car-D Segment)**	
1.2 TFSI (CYVB)	discØ 340, PR S3, PR 1LJ, PR 1LC	Gasolina	FWD	1197	81	110	05.14-08.16	■
1.4 TSI (CZEA)		Gasolina	FWD	1395	110	150	05.14-10.20	■
S3 quattro (CJXB)		Gasolina	4WD	1984	206	280	10.13-05.14	■
S3 quattro (CJXF)	discØ 340, PR S3, PR 1LJ, PR 1LC	Gasolina	4WD	1984	210	286	05.14-08.16	■
S3 quattro (CJXD)	discØ 340, PR S3, PR 1LJ, PR 1LC	Gasolina	4WD	1984	213	290	08.16-10.20	■
S3 quattro (DJHB)	discØ 340, PR S3, PR 1LJ, PR 1LC	Gasolina	4WD	1984	213	290	08.16-10.20	■
S3 quattro (CYFB)	discØ 340, PR S3, PR 1LJ, PR 1LC	Gasolina	4WD	1984	215	292	05.14-10.20	■
S3 quattro (CJXC)		Gasolina	4WD	1984	221	300	10.13-10.20	■
S3 quattro (DNUE)		Gasolina	4WD	1984	221	300	10.13-10.20	■
S3 quattro (CJXG)	discØ 340, PR S3, PR 1LJ, PR 1LC	Gasolina	4WD	1984	228	310	06.16-10.20	■
S3 quattro (DJHA)	discØ 340, PR S3, PR 1LJ, PR 1LC	Gasolina	4WD	1984	228	310	06.16-10.20	■
1.6 TDI (CRKB)	discØ 340, PR S3, PR 1LJ, PR 1LC	Diesel	FWD	1598	81	110	05.14-10.20	■
1.6 TDI (CXXB)	discØ 340, PR S3, PR 1LJ, PR 1LC	Diesel	FWD	1598	81	110	05.14-10.20	■
1.6 TDI (DBKA)	discØ 340, PR S3, PR 1LJ, PR 1LC	Diesel	FWD	1598	81	110	05.14-10.20	■
A3 III Sportback (8VA, 8VF) 09.12-							**Hatchback (Compact executive car-D Segment)**	
S3 quattro (CJXB)	discØ 340, PR S3, PR 1LJ, PR 1LC	Gasolina	4WD	1984	206	280	05.13-08.16	■
S3 quattro (CJXF)		Gasolina	4WD	1984	210	286	05.14-08.16	■
S3 quattro (CJXD)		Gasolina	4WD	1984	213	290	07.16-10.20	■
S3 quattro (DJHB)		Gasolina	4WD	1984	213	290	07.16-10.20	■
S3 quattro (CJXC)	discØ 340, PR S3, PR 1LJ, PR 1LC	Gasolina	4WD	1984	221	300	11.12-10.20	■
S3 quattro (DNUE)	discØ 340, PR S3, PR 1LJ, PR 1LC	Gasolina	4WD	1984	221	300	11.12-10.20	■
S3 quattro (CJXG)	discØ 340, PR S3, PR 1LJ, PR 1LC	Gasolina	4WD	1984	228	310	06.16-10.20	■
S3 quattro (DJHA)	discØ 340, PR S3, PR 1LJ, PR 1LC	Gasolina	4WD	1984	228	310	06.16-10.20	■
A3 IV (8YS, 8YM) 03.20-							**Saloon (Compact executive car-D Segment)**	
S3 TFSI quattro		Gasolina	4WD	1984	245	333	02.24-	■
A3 IV Sportback (8YA, 8YF) 11.19-							**Hatchback (Compact executive car-D Segment)**	
S3 TFSI quattro		Gasolina	4WD	1984	245	333	02.24-	■
40 TFSIe		Gasol./elec.	FWD	1498	150	204	06.24-	■
45 TFSIe		Gasol./elec.	FWD	1498	200	272	11.24-	■
A3 Allstreet (8YJ) 02.24-							**Hatchback (Compact executive car-D Segment)**	
40 TFSIe		Gasol./elec.	FWD	1498	150	204	11.24-	■
Q2 (GAB, GAG) 06.16-							**SUV (Compact SUV-J Segment)**	
SQ2 TFSI quattro (DNUE)		Gasolina	4WD	1984	221	300	08.18-	■

LISTA DE APLICACIONES - BUYERS GUIDE

Q3 II (F3B) 07.18-								**SUV (Compact Crossover CUV-C Segment)**
35 TFSI (DADA)	PR 1LA, discØ 340	Gasolina	FWD	1498	110	150	08.18-	■
35 TFSI (DPCA)	PR 1LA, discØ 340	Gasolina	FWD	1498	110	150	08.18-	■
40 TFSI quattro (DKTC)		Gasolina	4WD	1984	140	190	07.18-06.21	■
45 TFSI	PR 1LA, discØ 340	Gasolina	FWD	1984	169	230	07.18-	■
45 TFSI quattro (DKTA)	PR 1LA, discØ 340	Gasolina	4WD	1984	169	230	07.18-	■
45 TFSI quattro	PR 1LA, discØ 340	Gasolina	4WD	1984	180	245	01.21-	■
35 TFSI Mild Hybrid (DFYA)	PR 1LA, discØ 340	Gasol./eléc.	FWD	1498	110	150	11.19-	■
35 TDI (DFGA)	PR 1LA, discØ 340	Diesel	FWD	1968	110	150	09.18-	■
35 TDI quattro (DFGA)	PR 1LA, discØ 340	Diesel	4WD	1968	110	150	09.18-	■
40 TDI	PR 1LA, discØ 340	Diesel	FWD	1968	140	190	09.18-	■
40 TDI quattro (DFHA)	PR 1LA, discØ 340	Diesel	4WD	1968	140	190	10.18-	■
40 TDI quattro		Diesel	4WD	1968	142	193	04.24-	■
Q3 II Sportback (F3N) 06.19-								**SUV (Compact Crossover CUV-C Segment)**
35 TFSI (DPCA)	PR 1LA, discØ 340	Gasolina	FWD	1498	110	150	09.19-	■
40 TFSI quattro (DKTC)		Gasolina	4WD	1984	140	190	11.19-06.21	■
45 TFSI quattro (DKTA)	PR 1LA, discØ 340	Gasolina	4WD	1984	169	230	06.19-	■
45 TFSI quattro	PR 1LA, discØ 340	Gasolina	4WD	1984	180	245	01.21-	■
35 TFSI Mild Hybrid (DFYA)	PR 1LA, discØ 340	Gasol./eléc.	FWD	1498	110	150	11.19-	■
35 TDI (DFGA)	PR 1LA, discØ 340	Diesel	FWD	1968	110	150	11.19-	■
35 TDI quattro (DFGA)	PR 1LA, discØ 340	Diesel	4WD	1968	110	150	09.19-	■
40 TDI quattro (DFHA)	PR 1LA, discØ 340	Diesel	4WD	1968	140	190	07.19-	■
40 TDI quattro		Diesel	4WD	1968	142	193	04.24-	■
AUDI (FAW)								
Q3 (G2B, G2G) 04.19-								**SUV (Compact Crossover CUV-C Segment)**
35 TFSI	PR 1LX	Gasolina	FWD	1395	110	150	04.19-	■
40 TFSI	PR 1LX	Gasolina	FWD	1984	137	186	04.19-	■
40 TFSI quattro	PR 1LX	Gasolina	4WD	1984	137	186	04.19-	■
45 TFSI quattro	PR 1LX	Gasolina	4WD	1984	162	220	04.19-	■
CUPRA								
ATECA (KH7, KHP, KBP) 09.18-								**SUV (Compact SUV-J Segment)**
1.5 TSI		Gasolina	FWD	1498	110	150	07.23-05.26	■
2.0 TSI 4Drive		Gasolina	4WD	1984	140	190	06.23-05.26	■
2.0 TSI 4Drive (DNUE)	PR 1LD, discØ 340	Gasolina	4WD	1984	221	300	09.18-05.26	■
2.0 TSI 4Drive	PR 1LD, discØ 340	Gasolina	4WD	1984	221	300	07.20-	■
2.0 TSI 4Drive	PR 1LD, discØ 340	Gasolina	4WD	1984	257	349	05.20-	■
FORMENTOR (KM7, KMP) 07.20-								**SUV (Compact SUV-J Segment)**
2.0 TSI		Gasolina	FWD	1984	180	245	03.21-	■
2.0 VZ		Gasolina	FWD	1984	195	265	11.24-	■
2.0 TSI 4Drive (DNFB)		Gasolina	4WD	1984	228	310	07.20-	■
1.4 e-HYBRID		Gasol./eléc.	FWD	1395	150	204	01.21-	■
1.4 e-Hybrid VZ		Gasol./eléc.	FWD	1395	180	245	02.21-	■
1.5 e-HYBRID		Gasol./eléc.	FWD	1498	150	204	07.24-	■
1.5 e-HYBRID VZ		Gasol./eléc.	FWD	1498	200	272	06.24-	■

LEON (KL1, KU1, KUG) 09.20-								**Hatchback (Compact car-C Segment)**
1.5 VZ e-HYBRID		Gasol./eléc.	FWD	1498	200	272	05.24-	■
LEON Sportstourer (KL8, KU8, KUD) 09.20-								**Estate (Compact car-C Segment)**
VZ e-HYBRID		Gasol./eléc.	FWD	1498	200	272	05.24-	■
HYUNDAI								
i30 III Combi Van (PDE) 03.17-								**Estate Van (Compact car-C Segment)**
1.6 CRDi VGT (D4FB)		Diesel	FWD	1582	81	110	03.17-	■
MERCEDES-BENZ (BBDC)								
C-Class (W204) 01.08-								**Saloon (Compact executive car-D Segment)**
C 200 CGI (204.048)	PR 1LJ, PR E14	Gasolina	RWD	1796	135	184	07.10-12.12	■
SEAT								
ALHAMBRA II (711) 06.10-								**Box Body/MPV (Large MPV-M1 Segment)**
TSi	PR 1LW, discØ 314	Gasolina	FWD	1395	110	150	05.15-12.22	■
TDI		Diesel	FWD	1968	85	116	10.14-09.18	■
TDI	PR 1LW, discØ 314	Diesel	FWD	1968	110	150	05.15-12.22	■
TDI 4Drive	PR 1LW, discØ 314	Diesel	4WD	1968	110	150	05.15-12.22	■
TDI	PR 1LW, discØ 314	Diesel	FWD	1968	135	184	05.15-08.18	■
ALHAMBRA II (710, 711) 06.10-								**MPV (Large MPV-M1 Segment)**
1.4 TSI (CAVA)	PR 1LW, discØ 314	Gasolina	FWD	1390	110	150	06.10-04.15	■
1.4 TSI (CNWB)	PR 1LW, discØ 314	Gasolina	FWD	1390	110	150	06.10-04.15	■
1.4 TSI (CTHA)	PR 1LW, discØ 314	Gasolina	FWD	1390	110	150	06.10-04.15	■
1.4 TSI (CZDA)	PR 1LW, discØ 314	Gasolina	FWD	1395	110	150	05.15-12.22	■
1.4 TSI (DJKA)	PR 1LW, discØ 314	Gasolina	FWD	1395	110	150	05.15-12.22	■
1.8 TSI (CDAA)	PR 1LW, discØ 314	Gasolina	FWD	1798	118	160	11.12-04.15	■
2.0 TSI (CCZA)	PR 1LW, discØ 314	Gasolina	FWD	1984	147	200	11.10-05.12	■
2.0 TSI (DEDA)	PR 1LW, discØ 314	Gasolina	FWD	1984	162	220	05.15-12.22	■
2.0 TDI (CFFE)	PR 1LW, discØ 314	Diesel	FWD	1968	85	115	05.11-12.22	■
2.0 TDI (CUVA)	PR 1LW, discØ 314	Diesel	FWD	1968	85	115	05.11-12.22	■
2.0 TDI (DFLD)	PR 1LW, discØ 314	Diesel	FWD	1968	85	115	05.11-12.22	■
2.0 TDI (DLTC)	PR 1LW, discØ 314	Diesel	FWD	1968	85	115	05.11-12.22	■
2.0 TDI (CFFA)	PR 1LW, discØ 314	Diesel	FWD	1968	100	136	06.10-05.11	■
2.0 TDI (CFFB)	discØ 314	Diesel	FWD	1968	103	140	06.10-04.15	■
2.0 TDI 4Drive (CFFB)	PR 1LW, discØ 314	Diesel	4WD	1968	103	140	05.11-04.15	■
2.0 TDI (CUVC)	PR 1LW, discØ 314	Diesel	FWD	1968	110	150	05.15-12.22	■
2.0 TDI (DFLA)	PR 1LW, discØ 314	Diesel	FWD	1968	110	150	05.15-12.22	■
2.0 TDI (DLTA)	PR 1LW, discØ 314	Diesel	FWD	1968	110	150	05.15-12.22	■
2.0 TDI 4Drive (CUVC)	PR 1LW, discØ 314	Diesel	4WD	1968	110	150	05.15-12.22	■
2.0 TDI 4Drive (DFLA)	PR 1LW, discØ 314	Diesel	4WD	1968	110	150	05.15-12.22	■
2.0 TDI (CFGB)	PR 1LW, discØ 314	Diesel	FWD	1968	125	170	06.10-02.13	■
2.0 TDI (CFGC)	PR 1LW, discØ 314	Diesel	FWD	1968	130	177	11.12-12.22	■
2.0 TDI (DLUB)	PR 1LW, discØ 314	Diesel	FWD	1968	130	177	11.12-12.22	■
2.0 TDI 4Drive (DLUB)		Diesel	4WD	1968	130	177	11.18-12.22	■
2.0 TDI (CUWA)	PR 1LW, discØ 314	Diesel	FWD	1968	135	184	05.15-08.18	■
2.0 TDI (DFMA)	PR 1LW, discØ 314	Diesel	FWD	1968	135	184	05.15-08.18	■
2.0 TDI 4Drive (DFMA)	PR 1LW, discØ 314	Diesel	4WD	1968	135	184	05.16-08.18	■

LISTA DE APLICACIONES - BUYERS GUIDE

LEON III (5F1) 09.12-								Hatchback Van (Compact car-C Segment)
2.0 Cupra (CJXH)		Gasolina	FWD	1984	213	290	09.15-10.16	■
2.0 Cupra (CJXC)		Gasolina	FWD	1984	221	300	01.17-08.18	■
LEON III (5F1) 09.12-								**Hatchback (Compact car-C Segment)**
1.0 TSI (CHZD)	PR 1LD, PR 1LG, PR 1LJ, discØ 340	Gasolina	FWD	999	85	115	05.15-08.20	■
1.0 TSI (DKRF)	PR 1LD, PR 1LG, PR 1LJ, discØ 340	Gasolina	FWD	999	85	115	05.15-08.20	■
1.2 TSI (CJZB)	PR 1LD, PR 1LG, PR 1LJ, discØ 340	Gasolina	FWD	1197	63	86	12.12-08.18	■
1.2 TSI (CYVA)	PR 1LD, PR 1LG, PR 1LJ, discØ 340	Gasolina	FWD	1197	63	86	12.12-08.18	■
1.2 TSI (CJZA)	PR 1LD, PR 1LG, PR 1LJ, discØ 340	Gasolina	FWD	1197	77	105	01.13-08.20	■
1.2 TSI (CYVB)	PR 1LD, PR 1LG, PR 1LJ, discØ 340	Gasolina	FWD	1197	81	110	04.14-08.20	■
1.4 TSI (CMBA)	PR 1LD, PR 1LG, PR 1LJ, discØ 340	Gasolina	FWD	1395	90	122	11.12-10.16	■
1.4 TSI (CXSA)	PR 1LD, PR 1LG, PR 1LJ, discØ 340	Gasolina	FWD	1395	90	122	11.12-10.16	■
1.4 TSI (CZCA)	PR 1LD, PR 1LG, PR 1LJ, discØ 340	Gasolina	FWD	1395	92	125	05.14-08.20	■
1.4 TSI (CHPA)	PR 1LD, PR 1LG, PR 1LJ, discØ 340	Gasolina	FWD	1395	103	140	09.12-08.20	■
1.4 TSI (CPTA)	PR 1LD, PR 1LG, PR 1LJ, discØ 340	Gasolina	FWD	1395	103	140	09.12-08.20	■
1.4 TSI (CZDA)	PR 1LD, PR 1LG, PR 1LJ, discØ 340	Gasolina	FWD	1395	110	150	05.14-08.20	■
1.4 TSI (CZEA)	PR 1LD, PR 1LG, PR 1LJ, discØ 340	Gasolina	FWD	1395	110	150	05.14-08.20	■
1.8 TSI (CJSA)	PR 1LD, PR 1LG, PR 1LJ, discØ 340	Gasolina	FWD	1798	132	180	02.13-08.18	■
2.0 Cupra (CJXE)		Gasolina	FWD	1984	195	265	10.13-08.20	■
2.0 Cupra (CJXA)		Gasolina	FWD	1984	206	280	10.13-08.20	■
2.0 Cupra (CJXH)		Gasolina	FWD	1984	213	290	10.15-08.20	■
2.0 Cupra (DNUC)		Gasolina	FWD	1984	213	290	10.15-08.20	■
2.0 Cupra (CJXC)		Gasolina	FWD	1984	221	300	01.17-08.18	■
1.4 TGI (CPWA)	PR 1LD, PR 1LG, PR 1LJ, discØ 340	Gasol./Gas (CNG)	FWD	1395	81	110	02.13-08.18	■
1.6 TDI (CLHB)	PR 1LD, PR 1LG, PR 1LJ, discØ 340	Diesel	FWD	1598	66	90	11.12-08.18	■
1.6 TDI (CXXA)	PR 1LD, PR 1LG, PR 1LJ, discØ 340	Diesel	FWD	1598	66	90	11.12-08.18	■
1.6 TDI (DDYB)	PR 1LD, PR 1LG, PR 1LJ, discØ 340	Diesel	FWD	1598	66	90	11.12-08.18	■
1.6 TDI (CLHA)	PR 1LD, PR 1LG, PR 1LJ, discØ 340	Diesel	FWD	1598	77	105	09.12-08.20	■
1.6 TDI (CRKB)	PR 1LD, PR 1LG, PR 1LJ, discØ 340	Diesel	FWD	1598	81	110	09.13-08.20	■
1.6 TDI (CXXB)	PR 1LD, PR 1LG, PR 1LJ, discØ 340	Diesel	FWD	1598	81	110	09.13-08.20	■
1.6 TDI (DBKA)	PR 1LD, PR 1LG, PR 1LJ, discØ 340	Diesel	FWD	1598	81	110	09.13-08.20	■
2.0 TDI (CRLD)	PR 1LD, PR 1LG, PR 1LJ, discØ 340	Diesel	FWD	1968	81	110	05.13-08.20	■
2.0 TDI (CRVA)	PR 1LD, PR 1LG, PR 1LJ, discØ 340	Diesel	FWD	1968	81	110	05.13-08.20	■
2.0 TDI (CRVC)	PR 1LD, PR 1LG, PR 1LJ, discØ 340	Diesel	FWD	1968	105	143	05.13-08.20	■
2.0 TDI (CKFC)	PR 1LD, PR 1LG, PR 1LJ, discØ 340	Diesel	FWD	1968	110	150	10.12-08.20	■
2.0 TDI (CRMB)	PR 1LD, PR 1LG, PR 1LJ, discØ 340	Diesel	FWD	1968	110	150	10.12-08.20	■
2.0 TDI (DFFA)	PR 1LD, PR 1LG, PR 1LJ, discØ 340	Diesel	FWD	1968	110	150	10.12-08.20	■

2.0 TDI (CUNA)	PR 1LD, PR 1LG, PR 1LJ, discØ 340	Diesel	FWD	1968	135	184	09.12-08.20	■
2.0 TDI (CUPA)	PR 1LD, PR 1LG, PR 1LJ, discØ 340	Diesel	FWD	1968	135	184	09.12-08.20	■
2.0 TDI (DJGA)	PR 1LD, PR 1LG, PR 1LJ, discØ 340	Diesel	FWD	1968	135	184	09.12-08.20	■
LEON III SC (5F5) 01.13-							**Coupe (Compact car-C Segment)**	
1.0 TSI (CHZD)	PR 1LD, PR 1LG, PR 1LJ, discØ 340	Gasolina	FWD	999	85	115	05.15-08.18	■
1.2 TSI (CJZB)	PR 1LD, PR 1LG, PR 1LJ, discØ 340	Gasolina	FWD	1197	63	86	01.13-08.18	■
1.2 TSI (CYVA)	PR 1LD, PR 1LG, PR 1LJ, discØ 340	Gasolina	FWD	1197	63	86	01.13-08.18	■
1.2 TSI (CJZA)	PR 1LD, PR 1LG, PR 1LJ, discØ 340	Gasolina	FWD	1197	77	105	02.13-04.14	■
1.2 TSI (CYVB)	PR 1LD, PR 1LG, PR 1LJ, discØ 340	Gasolina	FWD	1197	81	110	05.14-08.18	■
1.4 TSI (CMBA)	PR 1LD, PR 1LG, PR 1LJ, discØ 340	Gasolina	FWD	1395	90	122	02.13-06.15	■
1.4 TSI (CXSA)	PR 1LD, PR 1LG, PR 1LJ, discØ 340	Gasolina	FWD	1395	90	122	02.13-06.15	■
1.4 TSI (CZCA)	PR 1LD, PR 1LG, PR 1LJ, discØ 340	Gasolina	FWD	1395	92	125	05.14-08.18	■
1.4 TSI (CHPA)	PR 1LD, PR 1LG, PR 1LJ, discØ 340	Gasolina	FWD	1395	103	140	02.13-11.16	■
1.4 TSI (CPTA)	PR 1LD, PR 1LG, PR 1LJ, discØ 340	Gasolina	FWD	1395	103	140	02.13-11.16	■
1.4 TSI (CZEA)	PR 1LD, PR 1LG, PR 1LJ, discØ 340	Gasolina	FWD	1395	110	150	05.14-08.18	■
1.8 TSI (CJSA)	PR 1LD, PR 1LG, PR 1LJ, discØ 340	Gasolina	FWD	1798	132	180	02.13-08.18	■
2.0 Cupra (CJXE)		Gasolina	FWD	1984	195	265	10.13-11.16	■
2.0 Cupra (CJXA)		Gasolina	FWD	1984	206	280	10.13-11.16	■
2.0 Cupra (CJXH)		Gasolina	FWD	1984	213	290	10.15-11.16	■
2.0 Cupra (CJXC)		Gasolina	FWD	1984	221	300	01.17-08.18	■
1.6 TDI (CLHB)	PR 1LD, PR 1LG, PR 1LJ, discØ 340	Diesel	FWD	1598	66	90	02.13-08.18	■
1.6 TDI (CXXA)	PR 1LD, PR 1LG, PR 1LJ, discØ 340	Diesel	FWD	1598	66	90	02.13-08.18	■
1.6 TDI (DDYB)	PR 1LD, PR 1LG, PR 1LJ, discØ 340	Diesel	FWD	1598	66	90	02.13-08.18	■
1.6 TDI (CLHA)	PR 1LD, PR 1LG, PR 1LJ, discØ 340	Diesel	FWD	1598	77	105	02.13-08.18	■
1.6 TDI (CRKB)	PR 1LD, PR 1LG, PR 1LJ, discØ 340	Diesel	FWD	1598	81	110	09.13-11.16	■
1.6 TDI (CXXB)	PR 1LD, PR 1LG, PR 1LJ, discØ 340	Diesel	FWD	1598	81	110	09.13-11.16	■
2.0 TDI	PR 1LD, PR 1LG, PR 1LJ, discØ 340	Diesel	FWD	1968	81	110	02.13-	■
2.0 TDI (CRVC)	PR 1LD, PR 1LG, PR 1LJ, discØ 340	Diesel	FWD	1968	105	143	05.13-08.18	■
2.0 TDI (CKFC)	PR 1LD, PR 1LG, PR 1LJ, discØ 340	Diesel	FWD	1968	110	150	02.13-08.18	■
2.0 TDI (CRMB)	PR 1LD, PR 1LG, PR 1LJ, discØ 340	Diesel	FWD	1968	110	150	02.13-08.18	■
2.0 TDI (CUNA)	PR 1LD, PR 1LG, PR 1LJ, discØ 340	Diesel	FWD	1968	135	184	03.13-08.18	■
2.0 TDI (CUPA)	PR 1LD, PR 1LG, PR 1LJ, discØ 340	Diesel	FWD	1968	135	184	03.13-08.18	■
LEON III ST (5F8) 01.13-							**Estate Van (Compact car-C Segment)**	
2.0 Cupra (CJXA)		Gasolina	FWD	1984	206	280	10.13-08.20	■
2.0 Cupra (CJXC)		Gasolina	FWD	1984	221	300	11.16-08.18	■
2.0 Cupra 4Drive (CJXC)		Gasolina	4WD	1984	221	300	11.16-08.18	■

LISTA DE APLICACIONES - BUYERS GUIDE

LEON III ST (5F8) 09.12-								Estate (Compact car-C Segment)
1.0 TSI (CHZD)	PR 1LD, PR 1LG, PR 1LJ, discØ 340	Gasolina	FWD	999	85	115	05.15-08.20	■
1.0 TSI (DKRF)	PR 1LD, PR 1LG, PR 1LJ, discØ 340	Gasolina	FWD	999	85	115	05.15-08.20	■
1.2 TSI (CJZB)	PR 1LD, PR 1LG, PR 1LJ, discØ 340	Gasolina	FWD	1197	63	86	11.13-08.18	■
1.2 TSI (CYVA)	PR 1LD, PR 1LG, PR 1LJ, discØ 340	Gasolina	FWD	1197	63	86	11.13-08.18	■
1.2 TSI (CJZA)	PR 1LD, PR 1LG, PR 1LJ, discØ 340	Gasolina	FWD	1197	77	105	08.13-08.20	■
1.2 TSI (CYVB)	PR 1LD, PR 1LG, PR 1LJ, discØ 340	Gasolina	FWD	1197	81	110	05.14-08.20	■
1.4 TSI (CMBA)	PR 1LD, PR 1LG, PR 1LJ, discØ 340	Gasolina	FWD	1395	90	122	09.12-06.15	■
1.4 TSI (CXSA)	PR 1LD, PR 1LG, PR 1LJ, discØ 340	Gasolina	FWD	1395	90	122	09.12-06.15	■
1.4 TSI (CZCA)	PR 1LD, PR 1LG, PR 1LJ, discØ 340	Gasolina	FWD	1395	92	125	05.14-08.18	■
1.4 TSI (CHPA)	PR 1LD, PR 1LG, PR 1LJ, discØ 340	Gasolina	FWD	1395	103	140	10.13-08.20	■
1.4 TSI (CPTA)	PR 1LD, PR 1LG, PR 1LJ, discØ 340	Gasolina	FWD	1395	103	140	10.13-08.20	■
1.4 TSI (CZEA)	PR 1LD, PR 1LG, PR 1LJ, discØ 340	Gasolina	FWD	1395	110	150	05.14-08.20	■
1.8 TSI (CJSA)	PR 1LD, PR 1LG, PR 1LJ, discØ 340	Gasolina	FWD	1798	132	180	10.13-08.18	■
1.8 TSI 4Drive (CJSA)	PR 1LD, PR 1LG, PR 1LJ, discØ 340	Gasolina	4WD	1798	132	180	11.14-08.18	■
1.8 TSI 4Drive (CJSB)	PR 1LD, PR 1LG, PR 1LJ, discØ 340	Gasolina	4WD	1798	132	180	11.14-08.18	■
2.0 Cupra (CJXE)		Gasolina	FWD	1984	195	265	10.13-08.20	■
2.0 Cupra (CJXA)		Gasolina	FWD	1984	206	280	10.13-08.20	■
2.0 Cupra (CJXH)		Gasolina	FWD	1984	213	290	10.15-08.20	■
2.0 Cupra (DNUC)		Gasolina	FWD	1984	213	290	10.15-08.20	■
2.0 Cupra (CJXC)		Gasolina	FWD	1984	221	300	11.16-08.18	■
2.0 Cupra 4Drive (CJXC)		Gasolina	4WD	1984	221	300	11.16-08.20	■
2.0 Cupra 4Drive (DNUE)		Gasolina	4WD	1984	221	300	11.16-08.20	■
1.4 TGI (CPWA)	PR 1LD, PR 1LG, PR 1LJ, discØ 340	Gasol./Gas (CNG)	FWD	1395	81	110	10.13-08.18	■
1.6 TDI (CLHB)	PR 1LD, PR 1LG, PR 1LJ, discØ 340	Diesel	FWD	1598	66	90	11.13-08.18	■
1.6 TDI (CXXA)	PR 1LD, PR 1LG, PR 1LJ, discØ 340	Diesel	FWD	1598	66	90	11.13-08.18	■
1.6 TDI (DDYB)	PR 1LD, PR 1LG, PR 1LJ, discØ 340	Diesel	FWD	1598	66	90	11.13-08.18	■
1.6 TDI (CLHA)	PR 1LD, PR 1LG, PR 1LJ, discØ 340	Diesel	FWD	1598	77	105	10.13-08.20	■
1.6 TDI 4Drive (CLHA)	PR 1LD, PR 1LG, PR 1LJ, discØ 340	Diesel	4WD	1598	77	105	04.14-08.20	■
1.6 TDI (CRKB)	PR 1LD, PR 1LG, PR 1LJ, discØ 340	Diesel	FWD	1598	81	110	09.13-08.20	■
1.6 TDI (CXXB)	PR 1LD, PR 1LG, PR 1LJ, discØ 340	Diesel	FWD	1598	81	110	09.13-08.20	■
1.6 TDI (DBKA)	PR 1LD, PR 1LG, PR 1LJ, discØ 340	Diesel	FWD	1598	81	110	09.13-08.20	■
1.6 TDI 4Drive (CXXB)	PR 1LD, PR 1LG, PR 1LJ, discØ 340	Diesel	4WD	1598	81	110	11.14-08.20	■
2.0 TDI (CRVA)	PR 1LD, PR 1LG, PR 1LJ, discØ 340	Diesel	FWD	1968	81	110	02.13-12.16	■
2.0 TDI (CRVC)	PR 1LD, PR 1LG, PR 1LJ, discØ 340	Diesel	FWD	1968	105	143	10.13-08.18	■
2.0 TDI (CKFC)	PR 1LD, PR 1LG, PR 1LJ, discØ 340	Diesel	FWD	1968	110	150	10.13-08.20	■
2.0 TDI (CRBC)	PR 1LD, PR 1LG, PR 1LJ, discØ 340	Diesel	FWD	1968	110	150	10.13-08.20	■

2.0 TDI (CRLB)	PR 1LD, PR 1LG, PR 1LJ, discØ 340	Diesel	FWD	1968	110	150	10.13-08.20	■
2.0 TDI (CRMB)	PR 1LD, PR 1LG, PR 1LJ, discØ 340	Diesel	FWD	1968	110	150	10.13-08.20	■
2.0 TDI (DFFA)	PR 1LD, PR 1LG, PR 1LJ, discØ 340	Diesel	FWD	1968	110	150	10.13-08.20	■
2.0 TDI (DFGA)	PR 1LD, PR 1LG, PR 1LJ, discØ 340	Diesel	FWD	1968	110	150	10.13-08.20	■
2.0 TDI 4Drive (CRBC)	PR 1LD, PR 1LG, PR 1LJ, discØ 340	Diesel	4WD	1968	110	150	04.14-08.20	■
2.0 TDI 4Drive (CRLB)	PR 1LD, PR 1LG, PR 1LJ, discØ 340	Diesel	4WD	1968	110	150	04.14-08.20	■
2.0 TDI 4Drive (CRMB)	PR 1LD, PR 1LG, PR 1LJ, discØ 340	Diesel	4WD	1968	110	150	04.14-08.20	■
2.0 TDI 4Drive (DCYA)	PR 1LD, PR 1LG, PR 1LJ, discØ 340	Diesel	4WD	1968	110	150	04.14-08.20	■
2.0 TDI 4Drive (DFGA)	PR 1LD, PR 1LG, PR 1LJ, discØ 340	Diesel	4WD	1968	110	150	04.14-08.20	■
2.0 TDI (CUNA)	PR 1LD, PR 1LG, PR 1LJ, discØ 340	Diesel	FWD	1968	135	184	08.13-08.20	■
2.0 TDI (CUPA)	PR 1LD, PR 1LG, PR 1LJ, discØ 340	Diesel	FWD	1968	135	184	08.13-08.20	■
2.0 TDI (DJGA)	PR 1LD, PR 1LG, PR 1LJ, discØ 340	Diesel	FWD	1968	135	184	08.13-08.20	■
2.0 TDI 4Drive (CUNA)	PR 1LD, PR 1LG, PR 1LJ, discØ 340	Diesel	4WD	1968	135	184	11.14-08.18	■
2.0 TDI 4Drive (DJGA)	PR 1LD, PR 1LG, PR 1LJ, discØ 340	Diesel	4WD	1968	135	184	11.14-08.18	■
TARRACO (KN2) 09.18-							**SUV (Compact Crossover CUV-C Segment)**	
1.5 TSI ACT (DADA)	PR 1LA, PR 1LW, discØ 340	Gasolina	FWD	1498	110	150	09.18-05.24	■
1.5 TSI ACT (DPCA)	PR 1LA, PR 1LW, discØ 340	Gasolina	FWD	1498	110	150	09.18-05.24	■
2.0 TSI 4Drive (DKZA)	PR 1LA, PR 1LW, discØ 340	Gasolina	4WD	1984	140	190	09.18-05.24	■
2.0 TDI (DFGA)	PR 1LA, PR 1LW, discØ 340	Diesel	FWD	1968	110	150	09.18-05.24	■
2.0 TDI 4Drive (DFGA)	PR 1LA, PR 1LW, discØ 340	Diesel	4WD	1968	110	150	09.18-05.24	■
2.0 TDI 4Drive (DFHA)	PR 1LA, PR 1LW, discØ 340	Diesel	4WD	1968	140	190	09.18-05.24	■
SKODA								
(NS6, NS7, NV7) 10.16-							**SUV Van ()**	
1.5 TSI		Gasolina	FWD	1498	110	150	07.18-	■
2.0 TSI 4x4		Gasolina	4WD	1984	140	190	12.18-	■
2.0 TDI		Diesel	FWD	1968	110	150	03.17-	■
2.0 TDI 4x4		Diesel	4WD	1968	110	150	03.17-	■
2.0 TDI 4x4		Diesel	4WD	1968	140	190	10.16-	■
2.0 TDI 4x4		Diesel	4WD	1968	147	200	06.20-	■
2.0 Bi- TDi RS 4x4		Diesel	4WD	1968	176	239	07.18-	■
KODIAQ (NS6, NS7, NV7) 10.16-							**SUV (Large SUV-J Segment)**	
1.4 TSI (CZCA)	PR 1LW, discØ 314 | PR 1LA, PR 1LG, discØ 340	Gasolina	FWD	1395	92	125	10.16-	■
1.4 TSI (CZDA)	PR 1LW, discØ 314, PR 1LA, PR 1LG, discØ 340	Gasolina	FWD	1395	110	150	10.16-	■
1.4 TSI (CZEA)	PR 1LW, discØ 314, PR 1LA, PR 1LG, discØ 340	Gasolina	FWD	1395	110	150	10.16-	■
1.4 TSI 4x4 (CZDA)	PR 1LW, discØ 314, PR 1LA, PR 1LG, discØ 340	Gasolina	4WD	1395	110	150	10.16-	■
1.4 TSI 4x4 (CZEA)	PR 1LW, discØ 314, PR 1LA, PR 1LG, discØ 340	Gasolina	4WD	1395	110	150	10.16-	■
1.5 TSI (DADA)	PR 1LW, discØ 314, PR 1LA, PR 1LG, discØ 340	Gasolina	FWD	1498	110	150	07.18-	■
1.5 TSI (DPCA)	PR 1LW, discØ 314, PR 1LA, PR 1LG, discØ 340	Gasolina	FWD	1498	110	150	07.18-	■
1.5 TSI 4x4 (DADA)	PR 1LW, discØ 314, PR 1LA, PR 1LG, discØ 340	Gasolina	4WD	1498	110	150	07.18-	■
1.5 TSI 4x4 (DPCA)	PR 1LW, discØ 314, PR 1LA, PR 1LG, discØ 340	Gasolina	4WD	1498	110	150	07.18-	■

2.0 TSI 4x4 (CZPA)	PR 1LW, discØ 314, PR 1LA, PR 1LG, discØ 340	Gasolina	4WD	1984	132	180	10.16-	■
2.0 TSI 4x4 (DKZA)		Gasolina	4WD	1984	140	190	02.19-	■
2.0 RS 4x4		Gasolina	4WD	1984	180	245	06.21-	■
2.0 TDI (DFGC)		Diesel	FWD	1968	85	115	02.19-	■
2.0 TDI		Diesel	FWD	1968	85	116	07.18-	■
2.0 TDI (DBGA)	PR 1LW, discØ 314, PR 1LA, PR 1LG, discØ 340	Diesel	FWD	1968	110	150	10.16-	■
2.0 TDI (DBGC)	PR 1LW, discØ 314, PR 1LA, PR 1LG, discØ 340	Diesel	FWD	1968	110	150	10.16-	■
2.0 TDI (DFGA)	PR 1LW, discØ 314, PR 1LA, PR 1LG, discØ 340	Diesel	FWD	1968	110	150	10.16-	■
2.0 TDI (DTSB)	PR 1LW, discØ 314, PR 1LA, PR 1LG, discØ 340	Diesel	FWD	1968	110	150	10.16-	■
2.0 TDI 4x4 (DBGA)	PR 1LW, discØ 314, PR 1LA, PR 1LG, discØ 340	Diesel	4WD	1968	110	150	10.16-	■
2.0 TDI 4x4 (DBGC)	PR 1LW, discØ 314, PR 1LA, PR 1LG, discØ 340	Diesel	4WD	1968	110	150	10.16-	■
2.0 TDI 4x4 (DFGA)	PR 1LW, discØ 314, PR 1LA, PR 1LG, discØ 340	Diesel	4WD	1968	110	150	10.16-	■
2.0 TDI 4x4 (DTSB)	PR 1LW, discØ 314, PR 1LA, PR 1LG, discØ 340	Diesel	4WD	1968	110	150	10.16-	■
2.0 TDI 4x4 (DFHA)	PR 1LW, discØ 314, PR 1LA, PR 1LG, discØ 340	Diesel	4WD	1968	140	190	10.16-	■
2.0 RS Bi-TDI 4x4 (CUAA)	PR 1LW, discØ 314, PR 1LA, PR 1LG, discØ 340	Diesel	4WD	1968	176	239	11.18-	■
OCTAVIA IV (NX3, NN3, PV3) 01.20-							**Hatchback (Compact car-C Segment)**	
1.5 TSI (DPCA)	ch- TMBZZZ5EZL-000001, PR 1LG, discØ 340	Gasolina	FWD	1498	110	150	01.20-	■
2.0 TSI RS		Gasolina	FWD	1984	195	265	08.24-	■
1.4 TSI iV		Gasol./eléc.	FWD	1395	150	204	06.20-	■
1.4 TSI RS iV		Gasol./eléc.	FWD	1395	180	245	06.20-	■
2.0 TDI (DSUD)	ch- TMBZZZ5EZL-000001, PR 1LG, discØ 340	Diesel	FWD	1968	85	116	03.20-	■
2.0 TDI (DSTB)	ch- TMBZZZ5EZL-000001, PR 1LG, discØ 340	Diesel	FWD	1968	110	150	01.20-	■
OCTAVIA IV Combi (NX5, PV5) 11.19-							**Estate (Compact car-C Segment)**	
1.5 TSI (DPCA)	ch- TMBZZZ5EZL-000001, PR 1LG, discØ 340	Gasolina	FWD	1498	110	150	11.19-	■
2.0 RS TSi		Gasolina	FWD	1984	195	265	08.24-	■
1.4 TSI iV		Gasol./eléc.	FWD	1395	150	204	06.20-	■
2.0 TDI (DSUD)	ch- TMBZZZ5EZL-000001, PR 1LG, discØ 340	Diesel	FWD	1968	85	116	11.19-	■
2.0 TDI (DSTB)	ch- TMBZZZ5EZL-000001, PR 1LG, discØ 340	Diesel	FWD	1968	110	150	11.19-	■
OCTAVIA III (5E3, NL3, NR3) 11.12-							**Hatchback (Compact car-C Segment)**	
1.0 TSI (CHZD)	PR 1LG, discØ 340	Gasolina	FWD	999	85	115	05.16-10.20	■
1.0 TSI (DKRA)	PR 1LG, discØ 340	Gasolina	FWD	999	85	115	05.16-10.20	■
1.0 TSI (DKRF)	PR 1LG, discØ 340	Gasolina	FWD	999	85	115	05.16-10.20	■
1.2 TSI (CJZB)	PR 1LG, discØ 340	Gasolina	FWD	1197	63	86	11.12-02.17	■
1.2 TSI (CYVA)	PR 1LG, discØ 340	Gasolina	FWD	1197	63	86	11.12-02.17	■
1.2 TSI (CJZA)	PR 1LG, discØ 340	Gasolina	FWD	1197	77	105	11.12-02.17	■
1.2 TSI (CYVB)	PR 1LG, discØ 340	Gasolina	FWD	1197	81	110	05.15-02.17	■
1.4 TSI (CHPA)	PR 1LG, discØ 340	Gasolina	FWD	1395	103	140	11.12-02.17	■
1.4 TSI (CHPB)	PR 1LG, discØ 340	Gasolina	FWD	1395	110	150	08.14-10.20	■
1.4 TSI (CZDA)	PR 1LG, discØ 340	Gasolina	FWD	1395	110	150	08.14-10.20	■
1.6 (CWVA)	PR 1LG, discØ 340	Gasolina	FWD	1598	81	110	01.14-10.20	■
1.8 TSI (CJSA)	PR 1LG, discØ 340	Gasolina	FWD	1798	132	180	11.12-10.20	■

1.8 TSI 4x4 (CJSB)	PR 1LG, discØ 340	Gasolina	4WD	1798	132	180	05.14-10.20	■
2.0 TSI RS (CHHB)	PR 1LG, discØ 340	Gasolina	FWD	1984	162	220	05.13-02.17	■
2.0 TSI RS (CHHA)	PR 1LG, discØ 340	Gasolina	FWD	1984	169	230	05.15-10.20	■
2.0 TSI RS (DHGA)		Gasolina	FWD	1984	180	245	02.17-10.20	■
2.0 TSI RS (DKTB)		Gasolina	FWD	1984	180	245	02.17-10.20	■
2.0 TSI RS (DLBA)		Gasolina	FWD	1984	180	245	02.17-10.20	■
1.4 TSI G-TEC (CPWA)	PR 1LG, discØ 340	Gasol./Gas (CNG)	FWD	1395	81	110	11.13-02.17	■
1.6 TDI (CLHB)	PR 1LG, discØ 340	Diesel	FWD	1598	66	90	11.12-10.20	■
1.6 TDI (CRKA)	PR 1LG, discØ 340	Diesel	FWD	1598	66	90	11.12-10.20	■
1.6 TDI (CXXA)	PR 1LG, discØ 340	Diesel	FWD	1598	66	90	11.12-10.20	■
1.6 TDI (DDYB)	PR 1LG, discØ 340	Diesel	FWD	1598	66	90	11.12-10.20	■
1.6 TDI (CLHA)	PR 1LG, discØ 340	Diesel	FWD	1598	77	105	11.12-05.15	■
1.6 TDI 4x4 (CLHA)	PR 1LG, discØ 340	Diesel	4WD	1598	77	105	05.13-05.15	■
1.6 TDI (CRKB)	PR 1LG, discØ 340	Diesel	FWD	1598	81	110	05.13-02.17	■
1.6 TDI (CXXB)	PR 1LG, discØ 340	Diesel	FWD	1598	81	110	05.13-02.17	■
1.6 TDI (DBKA)	PR 1LG, discØ 340	Diesel	FWD	1598	81	110	05.13-02.17	■
2.0 TDI (CKFB)	PR 1LG, discØ 340	Diesel	FWD	1968	105	143	11.12-02.17	■
2.0 TDI (CRVC)	PR 1LG, discØ 340	Diesel	FWD	1968	105	143	11.12-02.17	■
2.0 TDI (CKFC)	PR 1LG, discØ 340	Diesel	FWD	1968	110	150	11.12-10.20	■
2.0 TDI (CRMB)	PR 1LG, discØ 340	Diesel	FWD	1968	110	150	11.12-10.20	■
2.0 TDI (CYKA)	PR 1LG, discØ 340	Diesel	FWD	1968	110	150	11.12-10.20	■
2.0 TDI (DCYA)	PR 1LG, discØ 340	Diesel	FWD	1968	110	150	11.12-10.20	■
2.0 TDI (DFFA)	PR 1LG, discØ 340	Diesel	FWD	1968	110	150	11.12-10.20	■
2.0 TDI 4x4 (CKFC)	PR 1LG, discØ 340	Diesel	4WD	1968	110	150	05.13-10.20	■
2.0 TDI 4x4 (CRMB)	PR 1LG, discØ 340	Diesel	4WD	1968	110	150	05.13-10.20	■
2.0 TDI 4x4 (DCYA)	PR 1LG, discØ 340	Diesel	4WD	1968	110	150	05.13-10.20	■
2.0 TDI 4x4 (DFFA)	PR 1LG, discØ 340	Diesel	4WD	1968	110	150	05.13-10.20	■
2.0 TDI / TDI RS 4x4 (CUNA)	PR 1LG, discØ 340	Diesel	4WD	1968	135	184	05.13-10.20	■
2.0 TDI / TDI RS 4x4 (CUPA)	PR 1LG, discØ 340	Diesel	4WD	1968	135	184	05.13-10.20	■
2.0 TDI / TDI RS 4x4 (DJGA)	PR 1LG, discØ 340	Diesel	4WD	1968	135	184	05.13-10.20	■
2.0 TDI RS (CUNA)	PR 1LG, discØ 340	Diesel	FWD	1968	135	184	05.13-10.20	■
2.0 TDI RS (CUPA)	PR 1LG, discØ 340	Diesel	FWD	1968	135	184	05.13-10.20	■
2.0 TDI RS (DJGA)	PR 1LG, discØ 340	Diesel	FWD	1968	135	184	05.13-10.20	■
OCTAVIA III Combi (5E5, 5E6) 11.12-							**Estate (Compact car-C Segment)**	
1.0 TSI (CHZD)	PR 1LG, discØ 340	Gasolina	FWD	999	85	115	05.16-10.20	■
1.0 TSI (DKRA)	PR 1LG, discØ 340	Gasolina	FWD	999	85	115	05.16-10.20	■
1.0 TSI (DKRF)	PR 1LG, discØ 340	Gasolina	FWD	999	85	115	05.16-10.20	■
1.2 TSI (CJZB)	PR 1LG, discØ 340	Gasolina	FWD	1197	63	86	11.12-02.17	■
1.2 TSI (CYVA)	PR 1LG, discØ 340	Gasolina	FWD	1197	63	86	11.12-02.17	■
1.2 TSI (CJZA)	PR 1LG, discØ 340	Gasolina	FWD	1197	77	105	11.12-02.17	■
1.2 TSI (CYVB)	PR 1LG, discØ 340	Gasolina	FWD	1197	81	110	05.15-02.17	■
1.4 TSI (CHPA)	PR 1LG, discØ 340	Gasolina	FWD	1395	103	140	11.12-02.17	■
1.4 TSI (CHPB)	PR 1LG, discØ 340	Gasolina	FWD	1395	110	150	08.14-10.20	■
1.4 TSI (CZDA)	PR 1LG, discØ 340	Gasolina	FWD	1395	110	150	08.14-10.20	■
1.6 SRE (CWVA)	PR 1LG, discØ 340	Gasolina	FWD	1598	81	110	01.14-02.17	■
1.8 TSI (CJSA)	PR 1LG, discØ 340	Gasolina	FWD	1798	132	180	11.12-10.20	■
1.8 TSI (CJSB)	PR 1LG, discØ 340	Gasolina	FWD	1798	132	180	11.12-10.20	■
1.8 TSI 4x4 (CJSB)	PR 1LG, discØ 340	Gasolina	4WD	1798	132	180	11.12-02.17	■
2.0 TSI RS (CHHB)	PR 1LG, discØ 340	Gasolina	FWD	1984	162	220	11.12-02.17	■
2.0 TSI RS (CHHA)	PR 1LG, discØ 340	Gasolina	FWD	1984	169	230	05.15-10.20	■

2.0 TSI RS (DHGA)		Gasolina	FWD	1984	180	245	02.17-10.20	■
2.0 TSI RS (DKTB)		Gasolina	FWD	1984	180	245	02.17-10.20	■
2.0 TSI RS (DLBA)		Gasolina	FWD	1984	180	245	02.17-10.20	■
1.4 TSI G-TEC (CPWA)	PR 1LG, discØ 340	Gasol./Gas (CNG)	FWD	1395	81	110	11.12-02.17	■
1.6 TDI (CLHB)	PR 1LG, discØ 340	Diesel	FWD	1598	66	90	11.12-10.20	■
1.6 TDI (CRKA)	PR 1LG, discØ 340	Diesel	FWD	1598	66	90	11.12-10.20	■
1.6 TDI (CXXA)	PR 1LG, discØ 340	Diesel	FWD	1598	66	90	11.12-10.20	■
1.6 TDI (DDYB)	PR 1LG, discØ 340	Diesel	FWD	1598	66	90	11.12-10.20	■
1.6 TDI (CLHA)	PR 1LG, discØ 340	Diesel	FWD	1598	77	105	11.12-05.15	■
1.6 TDI 4x4 (CLHA)	PR 1LG, discØ 340	Diesel	4WD	1598	77	105	11.12-05.15	■
1.6 TDI (CRKB)	PR 1LG, discØ 340	Diesel	FWD	1598	81	110	05.13-02.17	■
1.6 TDI (CXXB)	PR 1LG, discØ 340	Diesel	FWD	1598	81	110	05.13-02.17	■
1.6 TDI (DBKA)	PR 1LG, discØ 340	Diesel	FWD	1598	81	110	05.13-02.17	■
2.0 TDI (CKFB)	PR 1LG, discØ 340	Diesel	FWD	1968	105	143	11.12-02.17	■
2.0 TDI (CRVC)	PR 1LG, discØ 340	Diesel	FWD	1968	105	143	11.12-02.17	■
2.0 TDI (CKFC)	PR 1LG, discØ 340	Diesel	FWD	1968	110	150	11.12-10.20	■
2.0 TDI (CRMB)	PR 1LG, discØ 340	Diesel	FWD	1968	110	150	11.12-10.20	■
2.0 TDI (CYKA)	PR 1LG, discØ 340	Diesel	FWD	1968	110	150	11.12-10.20	■
2.0 TDI (DCYA)	PR 1LG, discØ 340	Diesel	FWD	1968	110	150	11.12-10.20	■
2.0 TDI (DFFA)	PR 1LG, discØ 340	Diesel	FWD	1968	110	150	11.12-10.20	■
2.0 TDI 4x4 (CKFC)	PR 1LG, discØ 340	Diesel	4WD	1968	110	150	11.12-10.20	■
2.0 TDI 4x4 (CRMB)	PR 1LG, discØ 340	Diesel	4WD	1968	110	150	11.12-10.20	■
2.0 TDI 4x4 (DCYA)	PR 1LG, discØ 340	Diesel	4WD	1968	110	150	11.12-10.20	■
2.0 TDI 4x4 (DFFA)	PR 1LG, discØ 340	Diesel	4WD	1968	110	150	11.12-10.20	■
2.0 TDI / TDI RS 4x4 (CUNA)	PR 1LG, discØ 340	Diesel	4WD	1968	135	184	05.13-10.20	■
2.0 TDI / TDI RS 4x4 (CUPA)	PR 1LG, discØ 340	Diesel	4WD	1968	135	184	05.13-10.20	■
2.0 TDI / TDI RS 4x4 (DJGA)	PR 1LG, discØ 340	Diesel	4WD	1968	135	184	05.13-10.20	■
2.0 TDI RS (CUNA)	PR 1LG, discØ 340	Diesel	FWD	1968	135	184	05.13-10.20	■
2.0 TDI RS (CUPA)	PR 1LG, discØ 340	Diesel	FWD	1968	135	184	05.13-10.20	■
2.0 TDI RS (DJGA)	PR 1LG, discØ 340	Diesel	FWD	1968	135	184	05.13-10.20	■
SUPERB II (3T5) 10.09-05.15					**Estate (Executive car-E Segment)**			
3.6 V6 4x4 (CDVA)		Gasolina	4WD	3597	191	260	10.09-05.15	■
SUPERB II (3T4) 03.08-05.15					**Hatchback (Executive car-E Segment)**			
3.6 FSI 4x4 (CDVA)		Gasolina	4WD	3597	191	260	11.08-05.15	■
SUPERB III (3V5) 03.15-					**Estate (Executive car-E Segment)**			
1.4 TSI (CZCA)	PR 1LA, discØ 340	Gasolina	FWD	1395	92	125	03.15-06.24	■
1.4 TSI (CZDA)	PR 1LA, discØ 340	Gasolina	FWD	1395	110	150	03.15-06.24	■
1.4 TSI (CZEA)	PR 1LA, discØ 340	Gasolina	FWD	1395	110	150	03.15-06.24	■
1.4 TSI 4x4 (CZEA)	PR 1LA, discØ 340	Gasolina	4WD	1395	110	150	03.15-06.24	■
1.8 TSI (CJSA)	PR 1LA, discØ 340	Gasolina	FWD	1798	132	180	03.15-06.24	■
1.8 TSI (CJSC)	PR 1LA, discØ 340	Gasolina	FWD	1798	132	180	03.15-06.24	■
2.0 TSI (CHHB)	PR 1LA, discØ 340	Gasolina	FWD	1984	162	220	03.15-06.24	■
2.0 TSI 4x4 (DNUA)		Gasolina	4WD	1984	200	272	03.15-06.24	■
2.0 TSI 4x4 (CJXA)	PR 1LA, discØ 340	Gasolina	4WD	1984	206	280	03.15-06.24	■
2.0 TSI 4x4 (DNFE)	PR 1LA, discØ 340	Gasolina	4WD	1984	206	280	03.15-06.24	■
1.6 TDI (DCXA)	PR 1LA, discØ 340	Diesel	FWD	1598	88	120	03.15-06.24	■
1.6 TDI (DCZA)	PR 1LA, discØ 340	Diesel	FWD	1598	88	120	03.15-06.24	■
2.0 TDI (CRLB)	PR 1LA, discØ 340	Diesel	FWD	1968	110	150	03.15-06.24	■
2.0 TDI (DFEA)	PR 1LA, discØ 340	Diesel	FWD	1968	110	150	03.15-06.24	■

2.0 TDI (DFGA)	PR 1LA, discØ 340	Diesel	FWD	1968	110	150	03.15-06.24	■
2.0 TDI (DSRA)	PR 1LA, discØ 340	Diesel	FWD	1968	110	150	03.15-06.24	■
2.0 TDI (DSRB)	PR 1LA, discØ 340	Diesel	FWD	1968	110	150	03.15-06.24	■
2.0 TDI 4x4 (CRLB)	PR 1LA, discØ 340	Diesel	4WD	1968	110	150	03.15-06.24	■
2.0 TDI 4x4 (DFEA)	PR 1LA, discØ 340	Diesel	4WD	1968	110	150	03.15-06.24	■
2.0 TDI 4x4 (DFGA)	PR 1LA, discØ 340	Diesel	4WD	1968	110	150	03.15-06.24	■
2.0 TDI (DDAA)	PR 1LA, discØ 340	Diesel	FWD	1968	140	190	03.15-06.24	■
2.0 TDI (DFCA)	PR 1LA, discØ 340	Diesel	FWD	1968	140	190	03.15-06.24	■
2.0 TDI (DFHA)	PR 1LA, discØ 340	Diesel	FWD	1968	140	190	03.15-06.24	■
2.0 TDI 4x4 (DDAA)	PR 1LA, discØ 340	Diesel	4WD	1968	140	190	03.15-06.24	■
2.0 TDI 4x4 (DFCA)	PR 1LA, discØ 340	Diesel	4WD	1968	140	190	03.15-06.24	■
2.0 TDI 4x4 (DFHA)	PR 1LA, discØ 340	Diesel	4WD	1968	140	190	03.15-06.24	■
SUPERB III (3V3) 03.15-							**Hatchback (Executive car-E Segment)**	
1.4 TSI (CZCA)	PR 1LA, discØ 340	Gasolina	FWD	1395	92	125	03.15-06.24	■
1.4 TSI (CZDA)	PR 1LA, discØ 340	Gasolina	FWD	1395	110	150	03.15-06.24	■
1.4 TSI (CZEA)	PR 1LA, discØ 340	Gasolina	FWD	1395	110	150	03.15-06.24	■
1.4 TSI 4x4 (CZEA)	PR 1LA, discØ 340	Gasolina	4WD	1395	110	150	03.15-06.24	■
1.8 TSI (CJSA)	PR 1LA, discØ 340	Gasolina	FWD	1798	132	180	03.15-06.24	■
1.8 TSI (CJSC)	PR 1LA, discØ 340	Gasolina	FWD	1798	132	180	03.15-06.24	■
2.0 TFSI (CHHB)	PR 1LA, discØ 340	Gasolina	FWD	1984	162	220	03.15-06.24	■
2.0 TSI 4x4 (DNUA)		Gasolina	4WD	1984	200	272	03.15-06.24	■
2.0 TFSI 4x4 (CJXA)	PR 1LA, discØ 340	Gasolina	4WD	1984	206	280	03.15-06.24	■
2.0 TFSI 4x4 (DNFE)	PR 1LA, discØ 340	Gasolina	4WD	1984	206	280	03.15-06.24	■
1.6 TDI (DCXA)	PR 1LA, discØ 340	Diesel	FWD	1598	88	120	03.15-06.24	■
1.6 TDI (DCZA)	PR 1LA, discØ 340	Diesel	FWD	1598	88	120	03.15-06.24	■
2.0 TDI (CRLB)	PR 1LA, discØ 340	Diesel	FWD	1968	110	150	03.15-06.24	■
2.0 TDI (DFEA)	PR 1LA, discØ 340	Diesel	FWD	1968	110	150	03.15-06.24	■
2.0 TDI (DFGA)	PR 1LA, discØ 340	Diesel	FWD	1968	110	150	03.15-06.24	■
2.0 TDI (DSRA)	PR 1LA, discØ 340	Diesel	FWD	1968	110	150	03.15-06.24	■
2.0 TDI (DSRB)	PR 1LA, discØ 340	Diesel	FWD	1968	110	150	03.15-06.24	■
2.0 TDI 4x4 (CRLB)	PR 1LA, discØ 340	Diesel	4WD	1968	110	150	03.15-06.24	■
2.0 TDI 4x4 (DFEA)	PR 1LA, discØ 340	Diesel	4WD	1968	110	150	03.15-06.24	■
2.0 TDI 4x4 (DFGA)	PR 1LA, discØ 340	Diesel	4WD	1968	110	150	03.15-06.24	■
2.0 TDI (DDAA)	PR 1LA, discØ 340	Diesel	FWD	1968	140	190	03.15-06.24	■
2.0 TDI (DFCA)	PR 1LA, discØ 340	Diesel	FWD	1968	140	190	03.15-06.24	■
2.0 TDI (DFHA)	PR 1LA, discØ 340	Diesel	FWD	1968	140	190	03.15-06.24	■
2.0 TDI 4x4 (DDAA)	PR 1LA, discØ 340	Diesel	4WD	1968	140	190	03.15-06.24	■
2.0 TDI 4x4 (DFCA)	PR 1LA, discØ 340	Diesel	4WD	1968	140	190	03.15-06.24	■
2.0 TDI 4x4 (DFHA)	PR 1LA, discØ 340	Diesel	4WD	1968	140	190	03.15-06.24	■
SKODA (SVW)								
KODIAQ (0Z7, 0Z5) 04.17-							**SUV (Large SUV-J Segment)**	
Tsi 330		Gasolina	FWD	1984	137	186	01.18-	■
Tsi 380 4x4		Gasolina	4WD	1984	162	220	04.17-	■
Tsi 380 4x4		Gasolina	4WD	1984	162	220	03.19-	■
KODIAQ GT (0Z8, 0Z6) 11.18-							**SUV (Large SUV-J Segment)**	
1.4 Tsi 280	PR 1LX	Gasolina	FWD	1395	110	150	07.17-	■
2.0 Tsi 330	PR 1LX	Gasolina	FWD	1984	137	186	11.18-	■
2.0 Tsi 330 AWD	PR 1LX	Gasolina	4WD	1984	162	220	11.18-	■
2.0 Tsi 330 AWD	PR 1LX	Gasolina	4WD	1984	162	220	11.18-	■
VW								

LISTA DE APLICACIONES - BUYERS GUIDE

CC B7 (358) 11.11-10.17								Coupe (Large family car-D Segment)
1.4 TSI (CTHD)		Gasolina	FWD	1390	118	160	11.11-12.16	■
1.4 TSI (CZDA)		Gasolina	FWD	1395	110	150	05.15-12.16	■
1.8 TSI (CDAB)		Gasolina	FWD	1798	112	152	11.11-12.16	■
1.8 TSI (CDAA)		Gasolina	FWD	1798	118	160	11.11-12.16	■
2.0 TSI (CCZB)		Gasolina	FWD	1984	155	210	11.11-12.16	■
3.6 FSI	PR 1LA, PR 1LB	Gasolina	FWD	3597	206	280	11.11-	■
3.6 FSI	PR 1LA, PR 1LB	Gasolina	FWD	3597	206	280	11.11-	■
3.6 FSI 4motion (BWS)	01/12-, discØ 340, PR 1LA, PR 1LB	Gasolina	4WD	3597	220	300	11.11-12.16	■
1.4 TSI MultiFuel (CKMA)		Gasol./Etanol	FWD	1390	118	160	11.11-12.16	■
2.0 TDI (CFFA)		Diesel	FWD	1968	100	136	11.11-12.16	■
2.0 TDI (CFFB)		Diesel	FWD	1968	103	140	11.11-12.16	■
2.0 TDI 4motion (CFFB)		Diesel	4WD	1968	103	140	11.11-12.16	■
2.0 TDI (CUVC)	PR 1LA, PR 1LB	Diesel	FWD	1968	110	150	05.15-12.16	■
2.0 TDI (CFGB)		Diesel	FWD	1968	125	170	11.11-12.16	■
2.0 TDI (CLLA)		Diesel	FWD	1968	125	170	11.11-12.16	■
2.0 TDI 4motion (CFGB)		Diesel	4WD	1968	125	170	11.11-01.13	■
2.0 TDI (CFGC)		Diesel	FWD	1968	130	177	12.12-12.16	■
2.0 TDI 4motion (CFGC)	PR 1LA, PR 1LB	Diesel	4WD	1968	130	177	12.12-12.16	■
2.0 TDI (CUWA)	PR 1LA, PR 1LB	Diesel	FWD	1968	135	184	05.15-12.16	■
GOLF VII / JETTA VII (5G1, BQ1) 08.12-								**Hatchback Van (Compact car-C Segment)**
1.2 TSI (CJZB)	PR 1LJ, PR 1LM, discØ 340	Gasolina	FWD	1197	63	86	08.12-03.17	■
1.2 TSI (CJZA)	PR 1LJ, PR 1LM, discØ 340	Gasolina	FWD	1197	77	105	11.12-03.17	■
1.4 TSI (CXSA)	PR 1LJ, PR 1LM, discØ 340	Gasolina	FWD	1395	90	122	05.13-03.17	■
1.4 TSI (CHPA)	PR 1LJ, PR 1LM, discØ 340	Gasolina	FWD	1395	103	140	08.12-03.17	■
2.0 GTI (CHHB)	PR 1LJ, PR 1LM, discØ 340	Gasolina	FWD	1984	162	220	04.13-03.17	■
2.0 GTI (CHHA)	PR 1LJ, PR 1LM, discØ 340	Gasolina	FWD	1984	169	230	04.15-03.17	■
1.6 TDI (CRKA)	PR 1LJ, PR 1LM, discØ 340	Diesel	FWD	1598	66	90	04.13-03.17	■
1.6 TDI (CLHA)	PR 1LJ, PR 1LM, discØ 340	Diesel	FWD	1598	77	105	08.12-03.17	■
1.6 TDI (CRKB)	PR 1LJ, PR 1LM, discØ 340	Diesel	FWD	1598	81	110	11.13-03.17	■
1.6 TDI (CXXB)	PR 1LJ, PR 1LM, discØ 340	Diesel	FWD	1598	81	110	11.13-03.17	■
2.0 TDI	PR 1LJ, PR 1LM, discØ 340	Diesel	FWD	1968	110	150	05.13-05.14	■
2.0 TDI 4motion (CRBC)	PR 1LJ, PR 1LM, discØ 340	Diesel	4WD	1968	110	150	05.13-05.14	■
2.0 GTD (CUNA)	PR 1LJ, PR 1LM, discØ 340	Diesel	FWD	1968	135	184	04.13-03.17	■
GOLF VII / JETTA VII (5G1, BQ1, BE1, BE2) 08.12-								**Hatchback (Compact car-C Segment)**
1.2 TSI (CJZB)	PR 1LJ, PR 1LM, discØ 340	Gasolina	FWD	1197	63	86	08.12-03.17	■
1.2 TSI (CYVA)	PR 1LJ, PR 1LM, discØ 340	Gasolina	FWD	1197	63	86	08.12-03.17	■
1.2 TSI (CJZA)	PR 1LJ, PR 1LM, discØ 340	Gasolina	FWD	1197	77	105	11.12-08.20	■
1.2 TSI (CYVB)	PR 1LJ, PR 1LM, discØ 340	Gasolina	FWD	1197	81	110	04.14-03.17	■
1.4 TSI (CMBA)	PR 1LJ, PR 1LM, discØ 340	Gasolina	FWD	1395	90	122	11.12-03.17	■
1.4 TSI (CXSA)	PR 1LJ, PR 1LM, discØ 340	Gasolina	FWD	1395	90	122	11.12-03.17	■
1.4 TSI (CZCA)	PR 1LJ, PR 1LM, discØ 340	Gasolina	FWD	1395	92	125	05.14-08.20	■
1.4 TSI (CHPA)	PR 1LJ, PR 1LM, discØ 340	Gasolina	FWD	1395	103	140	08.12-08.20	■
1.4 TSI (CPTA)	PR 1LJ, PR 1LM, discØ 340	Gasolina	FWD	1395	103	140	08.12-08.20	■
1.4 TSI (CHPB)	PR 1LJ, PR 1LM, discØ 340	Gasolina	FWD	1395	110	150	05.14-03.21	■
1.4 TSI (CZDA)	PR 1LJ, PR 1LM, discØ 340	Gasolina	FWD	1395	110	150	05.14-03.21	■
1.4 TSI (CZEA)	PR 1LJ, PR 1LM, discØ 340	Gasolina	FWD	1395	110	150	05.14-03.21	■
1.4 TSI (DGXA)	PR 1LJ, PR 1LM, discØ 340	Gasolina	FWD	1395	110	150	05.14-03.21	■
1.5 TSI (DACA)	PR 1LK	Gasolina	FWD	1495	96	130	05.17-08.20	■

1.6 (CWVA)	PR 1LJ, PR 1LM, discØ 340	Gasolina	FWD	1598	81	110	05.14-07.17	■
2.0 GTI (CNTA)	PR 1LJ, PR 1LM, discØ 340	Gasolina	FWD	1984	155	210	11.13-07.17	■
2.0 GTI (CXCA)	PR 1LJ, PR 1LM, discØ 340	Gasolina	FWD	1984	155	210	11.13-07.17	■
2.0 GTI (CHHB)	PR 1LJ, PR 1LM, discØ 340	Gasolina	FWD	1984	162	220	04.13-08.20	■
2.0 GTI (CNTC)	PR 1LJ, PR 1LM, discØ 340	Gasolina	FWD	1984	162	220	04.13-08.20	■
2.0 GTI (CXCB)	PR 1LJ, PR 1LM, discØ 340	Gasolina	FWD	1984	162	220	04.13-08.20	■
2.0 GTI (CXDA)	PR 1LJ, PR 1LM, discØ 340	Gasolina	FWD	1984	162	220	04.13-08.20	■
2.0 GTI (CHHA)	PR 1LJ, PR 1LM, discØ 340	Gasolina	FWD	1984	169	230	04.13-08.20	■
2.0 GTI (CXDB)	PR 1LJ, PR 1LM, discØ 340	Gasolina	FWD	1984	169	230	04.13-08.20	■
2.0 GTI (DKTB)		Gasolina	FWD	1984	180	245	03.17-08.20	■
2.0 GTI (DLBA)		Gasolina	FWD	1984	180	245	03.17-08.20	■
2.0 GTI Clubsport (CJXE)	PR 1LJ, PR 1LM, discØ 340	Gasolina	FWD	1984	195	265	02.16-03.17	■
2.0 R 4motion (CJXB)	PR 1LJ, PR 1LM, discØ 340	Gasolina	4WD	1984	206	280	11.13-03.17	■
2.0 GTI TCR (CJXH)		Gasolina	FWD	1984	213	290	11.18-08.20	■
2.0 GTI TCR (DNUC)		Gasolina	FWD	1984	213	290	11.18-08.20	■
2.0 R	PR 1LJ, PR 1LM, discØ 340	Gasolina	FWD	1984	213	290	11.13-	■
2.0 R 4motion (CJXD)		Gasolina	4WD	1984	213	290	12.16-08.20	■
2.0 R 4motion (DJHB)		Gasolina	4WD	1984	213	290	12.16-08.20	■
2.0 R 4motion (DNUC)		Gasolina	4WD	1984	213	290	12.16-08.20	■
2.0 R 4motion (CYFB)	PR 1LJ, PR 1LM, discØ 340	Gasolina	4WD	1984	215	292	11.14-07.19	■
2.0 R 4motion (DJJA)	PR 1LJ, PR 1LM, discØ 340	Gasolina	4WD	1984	215	292	11.14-07.19	■
2.0 R 4motion (DLRA)	PR 1LJ, PR 1LM, discØ 340	Gasolina	4WD	1984	215	292	11.14-07.19	■
2.0 R 4motion (CJXC)	PR 1LJ, PR 1LM, discØ 340	Gasolina	4WD	1984	221	300	11.13-08.20	■
2.0 R 4motion (DNUE)	PR 1LJ, PR 1LM, discØ 340	Gasolina	4WD	1984	221	300	11.13-08.20	■
2.0 GTI Clubsport S (CJXG)	PR 1LJ, PR 1LM, discØ 340	Gasolina	FWD	1984	228	310	09.16-03.17	■
2.0 R 4motion (CJXG)		Gasolina	4WD	1984	228	310	12.16-08.20	■
2.0 R 4motion (DJHA)		Gasolina	4WD	1984	228	310	12.16-08.20	■
2.0 R 360S 4motion (CJXC)	PR 1LJ, PR 1LM, discØ 340	Gasolina	4WD	1984	265	360	09.16-03.17	■
1.4 TGI CNG (CPWA)	PR 1LJ, PR 1LM, discØ 340	Gasol./Gas (CNG)	FWD	1395	81	110	06.13-07.18	■
1.4 TGI CNG (CZBA)	PR 1LJ, PR 1LM, discØ 340	Gasol./Gas (CNG)	FWD	1395	81	110	06.13-07.18	■
1.4 TSI MultiFuel (CPVA)	PR 1LJ, PR 1LM, discØ 340	Gasol./Etanol	FWD	1395	90	122	11.12-03.17	■
1.4 TSI MultiFuel (CPVB)	PR 1LJ, PR 1LM, discØ 340	Gasol./Etanol	FWD	1395	92	125	12.13-07.18	■
1.4 GTE Hybrid (CUKB)	PR 1LJ, PR 1LM, discØ 340	Gasol./elék.	FWD	1395	150	204	05.14-08.20	■
1.6 TDI (CLHB)	PR 1LJ, PR 1LM, discØ 340	Diesel	FWD	1598	66	90	04.13-07.18	■
1.6 TDI (CRKA)	PR 1LJ, PR 1LM, discØ 340	Diesel	FWD	1598	66	90	04.13-07.18	■
1.6 TDI (CXXA)	PR 1LJ, PR 1LM, discØ 340	Diesel	FWD	1598	66	90	04.13-07.18	■
1.6 TDI (DDYB)	PR 1LJ, PR 1LM, discØ 340	Diesel	FWD	1598	66	90	04.13-07.18	■
1.6 TDI (CLHA)	PR 1LJ, PR 1LM, discØ 340	Diesel	FWD	1598	77	105	08.12-03.17	■
1.6 TDI 4motion (CLHA)	PR 1LJ, PR 1LM, discØ 340	Diesel	4WD	1598	77	105	11.12-03.17	■
1.6 TDI (CRKB)	PR 1LJ, PR 1LM, discØ 340	Diesel	FWD	1598	81	110	01.13-03.17	■
1.6 TDI (CXXB)	PR 1LJ, PR 1LM, discØ 340	Diesel	FWD	1598	81	110	01.13-03.17	■
1.6 TDI (DBKA)	PR 1LJ, PR 1LM, discØ 340	Diesel	FWD	1598	81	110	01.13-03.17	■
1.6 TDI 4motion (CRKB)	PR 1LJ, PR 1LM, discØ 340	Diesel	4WD	1598	81	110	01.13-03.17	■
1.6 TDI 4motion (CXXB)	PR 1LJ, PR 1LM, discØ 340	Diesel	4WD	1598	81	110	01.13-03.17	■
2.0 TDI (CRLD)	PR 1LJ, PR 1LM, discØ 340	Diesel	FWD	1968	81	110	11.12-08.20	■
2.0 TDI (CRVA)	PR 1LJ, PR 1LM, discØ 340	Diesel	FWD	1968	81	110	11.12-08.20	■
2.0 TDI (CYKB)	PR 1LJ, PR 1LM, discØ 340	Diesel	FWD	1968	81	110	11.12-08.20	■
2.0 TDI (DCYB)	PR 1LJ, PR 1LM, discØ 340	Diesel	FWD	1968	81	110	11.12-08.20	■

2.0 TDI (DEJB)	PR 1LJ, PR 1LM, discØ 340	Diesel	FWD	1968	81	110	11.12-08.20	■
2.0 TDI (DFGB)	PR 1LJ, PR 1LM, discØ 340	Diesel	FWD	1968	81	110	11.12-08.20	■
2.0 TDI (CRBB)	PR 1LJ, PR 1LM, discØ 340	Diesel	FWD	1968	105	143	08.12-08.20	■
2.0 TDI (CRVC)	PR 1LJ, PR 1LM, discØ 340	Diesel	FWD	1968	105	143	08.12-08.20	■
2.0 TDI (CRBC)	PR 1LJ, PR 1LM, discØ 340	Diesel	FWD	1968	110	150	08.12-08.20	■
2.0 TDI (CRLB)	PR 1LJ, PR 1LM, discØ 340	Diesel	FWD	1968	110	150	08.12-08.20	■
2.0 TDI (CRMB)	PR 1LJ, PR 1LM, discØ 340	Diesel	FWD	1968	110	150	08.12-08.20	■
2.0 TDI (CRUA)	PR 1LJ, PR 1LM, discØ 340	Diesel	FWD	1968	110	150	08.12-08.20	■
2.0 TDI (DCYA)	PR 1LJ, PR 1LM, discØ 340	Diesel	FWD	1968	110	150	08.12-08.20	■
2.0 TDI (DEJA)	PR 1LJ, PR 1LM, discØ 340	Diesel	FWD	1968	110	150	08.12-08.20	■
2.0 TDI (DFGA)	PR 1LJ, PR 1LM, discØ 340	Diesel	FWD	1968	110	150	08.12-08.20	■
2.0 TDI 4motion (CKFC)	PR 1LJ, PR 1LM, discØ 340	Diesel	4WD	1968	110	150	11.12-08.20	■
2.0 TDI 4motion (CRBC)	PR 1LJ, PR 1LM, discØ 340	Diesel	4WD	1968	110	150	11.12-08.20	■
2.0 TDI 4motion (CRLB)	PR 1LJ, PR 1LM, discØ 340	Diesel	4WD	1968	110	150	11.12-08.20	■
2.0 TDI 4motion (CRMB)	PR 1LJ, PR 1LM, discØ 340	Diesel	4WD	1968	110	150	11.12-08.20	■
2.0 TDI 4motion (DCYA)	PR 1LJ, PR 1LM, discØ 340	Diesel	4WD	1968	110	150	11.12-08.20	■
2.0 GTD	PR 1LJ, PR 1LM, discØ 340	Diesel	FWD	1968	130	177	11.16-	■
2.0 GTD (CUNA)	PR 1LJ, PR 1LM, discØ 340	Diesel	FWD	1968	135	184	04.13-08.20	■
2.0 GTD (DGCA)	PR 1LJ, PR 1LM, discØ 340	Diesel	FWD	1968	135	184	04.13-08.20	■
2.0 GTD (DJGA)	PR 1LJ, PR 1LM, discØ 340	Diesel	FWD	1968	135	184	04.13-08.20	■
GOLF VII ALLTRACK Variant (BA5, BV5) 12.14-					**Estate (Compact car-C Segment)**			
1.8 TSI 4motion	PR E14	Gasolina	4WD	1798	125	170	08.16-	■
1.8 TSI 4motion (CJSB)	PR 1LJ, PR 1LM, discØ 340	Gasolina	4WD	1798	132	180	12.14-08.20	■
1.6 TDI 4motion (CRKB)	PR 1LJ, PR 1LM, discØ 340	Diesel	4WD	1598	81	110	12.14-03.17	■
1.6 TDI 4motion (CXXB)	PR 1LJ, PR 1LM, discØ 340	Diesel	4WD	1598	81	110	12.14-03.17	■
2.0 TDI 4motion (CRBC)	PR 1LJ, PR 1LM, discØ 340	Diesel	4WD	1968	110	150	12.14-08.20	■
2.0 TDI 4motion (CRLB)	PR 1LJ, PR 1LM, discØ 340	Diesel	4WD	1968	110	150	12.14-08.20	■
2.0 TDI 4motion (DCYA)	PR 1LJ, PR 1LM, discØ 340	Diesel	4WD	1968	110	150	12.14-08.20	■
2.0 TDI 4motion (CUNA)	PR 1LJ, PR 1LM, discØ 340	Diesel	4WD	1968	135	184	12.14-08.20	■
2.0 TDI 4motion (DGCA)	PR 1LJ, PR 1LM, discØ 340	Diesel	4WD	1968	135	184	12.14-08.20	■
2.0 TDI 4motion (DJGA)	PR 1LJ, PR 1LM, discØ 340	Diesel	4WD	1968	135	184	12.14-08.20	■
GOLF VII VAN Variant / JETTA VII (BA5) 04.13-03.17							**Estate Van (Compact car-C Segment)**	
1.2 TSI (CJZB)	PR 1LJ, PR 1LM, discØ 340	Gasolina	FWD	1197	63	86	05.13-03.17	■
1.2 TSI (CYVA)	PR 1LJ, PR 1LM, discØ 340	Gasolina	FWD	1197	63	86	05.13-03.17	■
1.2 TSI (CJZA)	PR 1LJ, PR 1LM, discØ 340	Gasolina	FWD	1197	77	105	04.13-03.17	■
1.4 TSI (CXSA)	PR 1LJ, PR 1LM, discØ 340	Gasolina	FWD	1395	90	122	05.13-03.17	■
1.4 TSI (CHPA)	PR 1LJ, PR 1LM, discØ 340	Gasolina	FWD	1395	103	140	05.13-03.17	■
1.6 TDI (CLHB)	PR 1LJ, PR 1LM, discØ 340	Diesel	FWD	1598	66	90	05.13-03.17	■
1.6 TDI (CRKA)	PR 1LJ, PR 1LM, discØ 340	Diesel	FWD	1598	66	90	05.13-03.17	■
1.6 TDI (CXXA)	PR 1LJ, PR 1LM, discØ 340	Diesel	FWD	1598	66	90	05.13-03.17	■
1.6 TDI (CLHA)	PR 1LJ, PR 1LM, discØ 340	Diesel	FWD	1598	77	105	05.13-03.17	■
1.6 TDI 4motion (CLHA)	PR 1LJ, PR 1LM, discØ 340	Diesel	4WD	1598	77	105	05.13-03.17	■
1.6 TDI (CRKB)	PR 1LJ, PR 1LM, discØ 340	Diesel	FWD	1598	81	110	05.13-03.17	■
2.0 TDI (CRBC)	PR 1LJ, PR 1LM, discØ 340	Diesel	FWD	1968	110	150	04.13-03.17	■
2.0 TDI (CRLB)	PR 1LJ, PR 1LM, discØ 340	Diesel	FWD	1968	110	150	04.13-03.17	■
2.0 TDI 4motion (CRBC)	PR 1LJ, PR 1LM, discØ 340	Diesel	4WD	1968	110	150	04.13-03.17	■
2.0 TDI 4motion (CRLB)	PR 1LJ, PR 1LM, discØ 340	Diesel	4WD	1968	110	150	04.13-03.17	■
GOLF VII Variant / JETTA VII (BA5, BV5) 04.13-					**Estate (Compact car-C Segment)**			
1.0 TSI (CHZC)	PR E14	Gasolina	FWD	999	81	110	11.16-08.20	■
1.2 TSI (CJZB)	PR 1LJ, PR 1LM, discØ 340	Gasolina	FWD	1197	63	86	05.13-03.17	■

1.2 TSI (CYVA)	PR 1LJ, PR 1LM, discØ 340	Gasolina	FWD	1197	63	86	05.13-03.17	■
1.2 TSI (CJZA)	PR 1LJ, PR 1LM, discØ 340	Gasolina	FWD	1197	77	105	04.13-08.20	■
1.2 TSI MultiFuel	PR 1LJ, PR 1LM, discØ 340	Gasolina	FWD	1197	77	105	04.13-	■
1.2 TSI (CYVB)	PR 1LJ, PR 1LM, discØ 340	Gasolina	FWD	1197	81	110	04.14-03.17	■
1.4 TSI BiFuel	PR 1LJ, PR 1LM, discØ 340	Gasolina	FWD	1395	81	110	09.13-	■
1.4 TSI (CXSA)	PR 1LJ, PR 1LM, discØ 340	Gasolina	FWD	1395	90	122	05.13-03.17	■
1.4 TSI (CZCA)	PR 1LJ, PR 1LM, discØ 340	Gasolina	FWD	1395	92	125	05.14-08.20	■
1.4 TSI (CZDD)	PR 1LJ, PR 1LM, discØ 340	Gasolina	FWD	1395	92	125	05.14-08.20	■
1.4 TSI (CHPA)	PR 1LJ, PR 1LM, discØ 340	Gasolina	FWD	1395	103	140	05.13-08.20	■
1.4 TSI (CHPB)	PR 1LJ, PR 1LM, discØ 340	Gasolina	FWD	1395	110	150	05.14-03.21	■
1.4 TSI (CZDA)	PR 1LJ, PR 1LM, discØ 340	Gasolina	FWD	1395	110	150	05.14-03.21	■
1.4 TSI (DGXA)	PR 1LJ, PR 1LM, discØ 340	Gasolina	FWD	1395	110	150	05.14-03.21	■
1.5 TSI (DACA)	PR 1LK	Gasolina	FWD	1495	96	130	07.17-08.20	■
1.5 TSI (DPBA)	PR 1LK	Gasolina	FWD	1495	96	130	07.17-08.20	■
1.6 (CWVA)	PR 1LJ, PR 1LM, discØ 340	Gasolina	FWD	1598	81	110	05.14-07.17	■
2.0 R 4motion (CJXB)	PR 1LJ, PR 1LM, discØ 340	Gasolina	4WD	1984	206	280	03.15-03.17	■
2.0 R 4motion (CJXD)		Gasolina	4WD	1984	213	290	12.16-08.20	■
2.0 R 4motion (DJHB)		Gasolina	4WD	1984	213	290	12.16-08.20	■
2.0 R 4motion (DNUC)		Gasolina	4WD	1984	213	290	12.16-08.20	■
2.0 R 4motion (CJXC)	PR 1LJ, PR 1LM, discØ 340	Gasolina	4WD	1984	221	300	03.15-08.20	■
2.0 R 4motion (DNUE)	PR 1LJ, PR 1LM, discØ 340	Gasolina	4WD	1984	221	300	03.15-08.20	■
2.0 R 4motion (CJXG)		Gasolina	4WD	1984	228	310	12.16-08.20	■
2.0 R 4motion (DJHA)		Gasolina	4WD	1984	228	310	12.16-08.20	■
2.0 R 360S 4motion (CJXC)	PR 1LJ, PR 1LM, discØ 340	Gasolina	4WD	1984	265	360	09.16-03.17	■
1.4 TGI CNG (CPWA)	PR 1LJ, PR 1LM, discØ 340	Gasol./Gas (CNG)	FWD	1395	81	110	09.13-07.18	■
1.5 TGI (DHFA)	PR 1LK	Gasol./Gas (CNG)	FWD	1498	96	131	12.18-08.20	■
1.4 TSI MultiFuel (CPVA)	PR 1LJ, PR 1LM, discØ 340	Gasol./Etanol	FWD	1395	90	122	04.13-03.17	■
1.4 TSI MultiFuel (CPVB)	PR 1LJ, PR 1LM, discØ 340	Gasol./Etanol	FWD	1395	92	125	05.14-03.17	■
1.6 TDI (CLHB)	PR 1LJ, PR 1LM, discØ 340	Diesel	FWD	1598	66	90	05.13-07.18	■
1.6 TDI (CRKA)	PR 1LJ, PR 1LM, discØ 340	Diesel	FWD	1598	66	90	05.13-07.18	■
1.6 TDI (CXXA)	PR 1LJ, PR 1LM, discØ 340	Diesel	FWD	1598	66	90	05.13-07.18	■
1.6 TDI (DDYB)	PR 1LJ, PR 1LM, discØ 340	Diesel	FWD	1598	66	90	05.13-07.18	■
1.6 TDI (CLHA)	PR 1LJ, PR 1LM, discØ 340	Diesel	FWD	1598	77	105	05.13-03.17	■
1.6 TDI 4motion (CLHA)	PR 1LJ, PR 1LM, discØ 340	Diesel	4WD	1598	77	105	05.13-03.17	■
1.6 TDI (CRKB)	PR 1LJ, PR 1LM, discØ 340	Diesel	FWD	1598	81	110	05.13-03.17	■
1.6 TDI (CXXB)	PR 1LJ, PR 1LM, discØ 340	Diesel	FWD	1598	81	110	05.13-03.17	■
1.6 TDI (DBKA)	PR 1LJ, PR 1LM, discØ 340	Diesel	FWD	1598	81	110	05.13-03.17	■
1.6 TDI 4motion (CRKB)	PR 1LJ, PR 1LM, discØ 340	Diesel	4WD	1598	81	110	05.13-03.17	■
1.6 TDI 4motion (CXXB)	PR 1LJ, PR 1LM, discØ 340	Diesel	4WD	1598	81	110	05.13-03.17	■
1.6 TDI (DDYA)	PR E14	Diesel	FWD	1598	85	115	11.16-08.20	■
1.6 TDI (DGTE)	PR E14	Diesel	FWD	1598	85	115	11.16-08.20	■
2.0 TDI (CRLD)	PR 1LJ, PR 1LM, discØ 340	Diesel	FWD	1968	81	110	05.13-08.20	■
2.0 TDI (CRVA)	PR 1LJ, PR 1LM, discØ 340	Diesel	FWD	1968	81	110	05.13-08.20	■
2.0 TDI (CYKB)	PR 1LJ, PR 1LM, discØ 340	Diesel	FWD	1968	81	110	05.13-08.20	■
2.0 TDI (DCYB)	PR 1LJ, PR 1LM, discØ 340	Diesel	FWD	1968	81	110	05.13-08.20	■
2.0 TDI (DEJB)	PR 1LJ, PR 1LM, discØ 340	Diesel	FWD	1968	81	110	05.13-08.20	■
2.0 TDI (DFGB)	PR 1LJ, PR 1LM, discØ 340	Diesel	FWD	1968	81	110	05.13-08.20	■
2.0 TDI (CRBC)	PR 1LJ, PR 1LM, discØ 340	Diesel	FWD	1968	110	150	04.13-08.20	■

2.0 TDI (CRLB)	PR 1LJ, PR 1LM, discØ 340	Diesel	FWD	1968	110	150	04.13-08.20	■
2.0 TDI (CRUA)	PR 1LJ, PR 1LM, discØ 340	Diesel	FWD	1968	110	150	04.13-08.20	■
2.0 TDI (DCYA)	PR 1LJ, PR 1LM, discØ 340	Diesel	FWD	1968	110	150	04.13-08.20	■
2.0 TDI (DEJA)	PR 1LJ, PR 1LM, discØ 340	Diesel	FWD	1968	110	150	04.13-08.20	■
2.0 TDI (DFGA)	PR 1LJ, PR 1LM, discØ 340	Diesel	FWD	1968	110	150	04.13-08.20	■
2.0 TDI 4motion (CRBC)	PR 1LJ, PR 1LM, discØ 340	Diesel	4WD	1968	110	150	04.13-08.20	■
2.0 TDI 4motion (CRLB)	PR 1LJ, PR 1LM, discØ 340	Diesel	4WD	1968	110	150	04.13-08.20	■
2.0 TDI 4motion (DCYA)	PR 1LJ, PR 1LM, discØ 340	Diesel	4WD	1968	110	150	04.13-08.20	■
2.0 GTD	PR 1LJ, PR 1LM, discØ 340	Diesel	FWD	1968	130	177	11.16-	■
2.0 GTD (CUNA)	PR 1LJ, PR 1LM, discØ 340	Diesel	FWD	1968	135	184	01.15-07.19	■
2.0 GTD (DGCA)	PR 1LJ, PR 1LM, discØ 340	Diesel	FWD	1968	135	184	01.15-07.19	■
2.0 GTD (DJGA)	PR 1LJ, PR 1LM, discØ 340	Diesel	FWD	1968	135	184	01.15-07.19	■
GOLF VIII ALLTRACK (CG5) 11.20-					**Estate (Compact car-C Segment)**			
2.0 TSI 4motion		Gasolina	4WD	1984	140	190	03.21-11.24	■
GOLF VIII (CD1, DA1) 07.19-					**Hatchback (Compact car-C Segment)**			
1.4 TSI eHybrid		Gasol./eléc.	FWD	1395	150	204	07.20-	■
1.5 eHybrid		Gasol./eléc.	FWD	1498	150	204	06.24-	■
PASSAT B6 CC (357) 02.08-12.13					**Coupe (Large family car-D Segment)**			
1.8 TSI (CDAB)		Gasolina	FWD	1798	112	152	11.08-05.10	■
1.8 TSI (CGYA)		Gasolina	FWD	1798	112	152	11.08-05.10	■
1.8 TSI (BZB)		Gasolina	FWD	1798	118	160	06.08-01.12	■
1.8 TSI (CDAA)		Gasolina	FWD	1798	118	160	06.08-01.12	■
2.0 TFSI (CAWB)		Gasolina	FWD	1984	147	200	06.08-01.12	■
2.0 TFSI (CBFA)		Gasolina	FWD	1984	147	200	06.08-01.12	■
2.0 TFSI (CCTA)		Gasolina	FWD	1984	147	200	06.08-01.12	■
2.0 TFSI (CCZA)		Gasolina	FWD	1984	147	200	06.08-01.12	■
2.0 TSI (CCZB)		Gasolina	FWD	1984	155	211	11.10-01.12	■
3.6 FSI 4motion (BLV)	PR 1LA, PR 1LB, discØ 340	Gasolina	4WD	3580	206	280	06.08-01.12	■
3.6 FSI 4motion (CNNA)	PR 1LA, PR 1LB, discØ 340	Gasolina	4WD	3580	206	280	06.08-01.12	■
3.6 FSI	PR 1LA, PR 1LB	Gasolina	FWD	3597	206	280	06.08-	■
3.6 FSI 4motion (BWS)	01/10-, discØ 340, PR 1LA, PR 1LB	Gasolina	4WD	3597	220	300	02.08-12.11	■
1.4 TSI MultiFuel (CKMA)		Gasol./Etanol	FWD	1390	118	160	01.11-01.12	■
2.0 TDI (CBAA)		Diesel	FWD	1968	100	136	06.08-05.11	■
2.0 TDI (CFFA)		Diesel	FWD	1968	100	136	06.08-05.11	■
2.0 TDI (CBAB)		Diesel	FWD	1968	103	140	06.08-01.12	■
2.0 TDI (CFFB)		Diesel	FWD	1968	103	140	06.08-01.12	■
2.0 TDI 4motion (CBAB)		Diesel	4WD	1968	103	140	08.09-01.12	■
2.0 TDI 4motion (CFFB)		Diesel	4WD	1968	103	140	08.09-01.12	■
2.0 BlueTDI (CBAC)		Diesel	FWD	1968	105	143	05.09-11.10	■
2.0 TDI (CBBA)		Diesel	FWD	1968	120	163	02.08-05.09	■
2.0 TDI (CBBB)		Diesel	FWD	1968	125	170	06.08-01.12	■
2.0 TDI (CFGB)		Diesel	FWD	1968	125	170	06.08-01.12	■
2.0 TDI (CLLA)		Diesel	FWD	1968	125	170	06.08-01.12	■
2.0 TDI 4motion (CBBB)		Diesel	4WD	1968	125	170	11.09-01.12	■
2.0 TDI 4motion (CFGB)		Diesel	4WD	1968	125	170	11.09-01.12	■
PASSAT B7 (365) 08.10-12.14					**Estate Van (Large family car-D Segment)**			
2.0 TSI		Gasolina	FWD	1984	155	211	11.10-12.14	■
3.6 FSI 4motion (BWS)		Gasolina	4WD	3597	220	299	01.11-12.14	■

PASSAT B7 (362) 08.10-04.16								Saloon (Large family car-D Segment)
1.4 TSI (CAXA)		Gasolina	FWD	1390	90	122	08.10-12.14	■
1.8 TSI (CDAA)		Gasolina	FWD	1798	118	160	08.10-12.14	■
2.0 TSI (CCZB)		Gasolina	FWD	1984	155	210	11.10-12.14	■
2.5 (CBTA)	PR 1LA, PR 1LB	Gasolina	FWD	2480	125	170	01.11-12.20	■
2.5 (CBUA)	PR 1LA, PR 1LB	Gasolina	FWD	2480	125	170	01.11-12.20	■
2.5 (CCCA)	PR 1LA, PR 1LB	Gasolina	FWD	2480	125	170	01.11-12.20	■
3.6 FSI	discØ 345, PR 1LA, PR 1LB	Gasolina	FWD	3597	206	280	01.12-	■
3.6 FSI 4motion (BWS)	PR 1LA, PR 1LB, discØ 340	Gasolina	4WD	3597	220	300	01.11-12.14	■
1.6 TDI (CAYC)		Diesel	FWD	1598	77	105	08.10-12.14	■
2.0 TDI (CFFA)		Diesel	FWD	1968	100	136	08.10-12.14	■
2.0 TDI (CFFB)		Diesel	FWD	1968	103	140	08.10-12.14	■
2.0 TDI 4motion (CFFB)		Diesel	4WD	1968	103	140	08.10-12.14	■
2.0 TDI (CFGB)		Diesel	FWD	1968	125	170	08.10-12.14	■
2.0 TDI (CLLA)		Diesel	FWD	1968	125	170	08.10-12.14	■
2.0 TDI 4motion (CFGB)		Diesel	4WD	1968	125	170	08.10-01.13	■

PASSAT B7 ALLTRACK (365) 01.12-12.14								Estate (Large family car-D Segment)
1.8 TSI (CDAB)	PR 1LA, PR 1LB	Gasolina	FWD	1798	112	152	01.12-12.14	■
1.8 TSI (CDAA)	PR 1LA, PR 1LB	Gasolina	FWD	1798	118	160	01.12-12.14	■
2.0 TSI 4motion (CCZB)	PR 1LA, PR 1LB	Gasolina	4WD	1984	155	210	01.12-12.14	■
2.0 TDI (CFFB)	PR 1LA, PR 1LB	Diesel	FWD	1968	103	140	01.12-12.14	■
2.0 TDI 4motion (CFFB)	PR 1LA, PR 1LB	Diesel	4WD	1968	103	140	01.12-12.14	■
2.0 TDI 4motion (CFGB)	PR 1LA, PR 1LB	Diesel	4WD	1968	125	170	01.12-12.14	■
2.0 TDI 4motion (CFGC)	PR 1LA, PR 1LB	Diesel	4WD	1968	130	177	01.13-12.14	■

PASSAT B7 Variant (365) 08.10-12.15								Estate (Large family car-D Segment)
1.4 TSI (CAXA)		Gasolina	FWD	1390	90	122	08.10-12.14	■
1.8 TSI (CDAA)		Gasolina	FWD	1798	118	160	08.10-12.14	■
2.0 TSI (CCZB)		Gasolina	FWD	1984	155	210	11.10-12.15	■
3.6 FSI 4motion (BWS)	PR 1LA, PR 1LB, discØ 340	Gasolina	4WD	3597	220	300	01.11-12.14	■
1.6 TDI (CAYC)		Diesel	FWD	1598	77	105	08.10-12.14	■
2.0 TDI (CFFB)		Diesel	FWD	1968	103	140	08.10-12.14	■
2.0 TDI 4motion (CFFB)		Diesel	4WD	1968	103	140	08.10-12.14	■
2.0 TDI (CFGB)		Diesel	FWD	1968	125	170	08.10-12.14	■
2.0 TDI (CLLA)		Diesel	FWD	1968	125	170	08.10-12.14	■
2.0 TDI 4motion (CFGB)		Diesel	4WD	1968	125	170	08.10-01.13	■

PASSAT B8 (3G2, CB2) 08.14-								Saloon (Large family car-D Segment)
1.4 TSI (CZCA)	PR 1LA, PR 1LB, discØ 340	Gasolina	FWD	1395	92	125	11.14-11.18	■
1.4 TSI (CZDA)	PR 1LA, PR 1LB, discØ 340	Gasolina	FWD	1395	110	150	11.14-03.24	■
1.4 TSI (CZEA)	PR 1LA, PR 1LB, discØ 340	Gasolina	FWD	1395	110	150	11.14-03.24	■
1.4 TSI 4motion (CZEA)	PR 1LA, PR 1LB, discØ 340	Gasolina	4WD	1395	110	150	02.15-11.18	■
1.8 TSI (CJSA)	PR 1LA, PR 1LB, discØ 340	Gasolina	FWD	1798	132	180	02.15-07.19	■
1.8 TSI (CJSC)	PR 1LA, PR 1LB, discØ 340	Gasolina	FWD	1798	132	180	02.15-07.19	■
2.0 TSI (CHHB)	PR 1LA, PR 1LB, discØ 340	Gasolina	FWD	1984	162	220	02.15-03.24	■
2.0 TSI (CXDA)	PR 1LA, PR 1LB, discØ 340	Gasolina	FWD	1984	162	220	02.15-03.24	■
2.0 TSI 4motion (DNUA)		Gasolina	4WD	1984	200	272	09.18-11.20	■
2.0 TSI 4motion (CJXA)	PR 1LA, PR 1LB, discØ 340	Gasolina	4WD	1984	206	280	05.15-03.24	■
1.4 GTE Hybrid (CUKC)	PR 1LA	Gasol./elé c.	FWD	1395	160	218	06.15-03.24	■
1.4 GTE Hybrid (DGEB)	PR 1LA	Gasol./elé c.	FWD	1395	160	218	06.15-03.24	■
1.6 TDI (DCXA)	PR 1LA, PR 1LB, discØ 340	Diesel	FWD	1598	88	120	08.14-11.20	■

1.6 TDI (DCZA)	PR 1LA, PR 1LB, discØ 340	Diesel	FWD	1598	88	120	08.14-11.20	■
2.0 TDI (CRLB)	PR 1LA, PR 1LB, discØ 340	Diesel	FWD	1968	110	150	11.14-03.24	■
2.0 TDI (DBGA)	PR 1LA, PR 1LB, discØ 340	Diesel	FWD	1968	110	150	11.14-03.24	■
2.0 TDI (DFGA)	PR 1LA, PR 1LB, discØ 340	Diesel	FWD	1968	110	150	11.14-03.24	■
2.0 TDI (DSRA)	PR 1LA, PR 1LB, discØ 340	Diesel	FWD	1968	110	150	11.14-03.24	■
2.0 TDI (DSRB)	PR 1LA, PR 1LB, discØ 340	Diesel	FWD	1968	110	150	11.14-03.24	■
2.0 TDI 4motion (CRLB)	PR 1LA, PR 1LB, discØ 340	Diesel	4WD	1968	110	150	08.14-03.24	■
2.0 TDI 4motion (DFEA)	PR 1LA, PR 1LB, discØ 340	Diesel	4WD	1968	110	150	08.14-03.24	■
2.0 TDI 4motion (DFGA)	PR 1LA, PR 1LB, discØ 340	Diesel	4WD	1968	110	150	08.14-03.24	■
2.0 TDI	PR 1LA, PR 1LB	Diesel	FWD	1968	130	177	05.16-03.24	■
2.0 TDI (CUPA)	PR 1LA, PR 1LB, discØ 340	Diesel	FWD	1968	135	184	07.15-05.16	■
2.0 TDI (DDAA)	PR 1LA, PR 1LB, discØ 340	Diesel	FWD	1968	140	190	11.14-03.24	■
2.0 TDI (DFCA)	PR 1LA, PR 1LB, discØ 340	Diesel	FWD	1968	140	190	11.14-03.24	■
2.0 TDI (DFHA)	PR 1LA, PR 1LB, discØ 340	Diesel	FWD	1968	140	190	11.14-03.24	■
2.0 TDI 4motion (DDAA)	PR 1LA, PR 1LB, discØ 340	Diesel	4WD	1968	140	190	11.14-03.24	■
2.0 TDI 4motion (DFCA)	PR 1LA, PR 1LB, discØ 340	Diesel	4WD	1968	140	190	11.14-03.24	■
2.0 TDI 4motion (DFHA)	PR 1LA, PR 1LB, discØ 340	Diesel	4WD	1968	140	190	11.14-03.24	■
2.0 TDI 4motion (CUAA)	PR 1LA, PR 1LB, discØ 340	Diesel	4WD	1968	176	240	08.14-11.20	■
PASSAT B8 ALLTRACK Variant (3G5, CB5) 05.15-					**Estate (Large family car-D Segment)**			
1.4 TSI 4motion (CZEA)	PR 1LA	Gasolina	4WD	1395	110	150	05.15-11.18	■
2.0 TSI 4motion (CHHB)	PR 1LA, PR 1LB, discØ 340	Gasolina	4WD	1984	162	220	07.15-03.24	■
2.0 TSI 4motion (DNUA)		Gasolina	4WD	1984	200	272	08.18-11.20	■
2.0 TSI 4motion (CJXA)		Gasolina	4WD	1984	206	280	11.18-03.24	■
2.0 TDI 4motion (CRLB)	PR 1LA, PR 1LB, discØ 340	Diesel	4WD	1968	110	150	05.15-11.17	■
2.0 TDI 4motion (DFEA)	PR 1LA, PR 1LB, discØ 340	Diesel	4WD	1968	110	150	05.15-11.17	■
2.0 TDI 4motion (CUPA)	PR 1LA, PR 1LB, discØ 340	Diesel	4WD	1968	135	184	07.15-05.16	■
2.0 TDI 4motion (DDAA)	PR 1LA, PR 1LB, discØ 340	Diesel	4WD	1968	140	190	05.15-03.24	■
2.0 TDI 4motion (DFCA)	PR 1LA, PR 1LB, discØ 340	Diesel	4WD	1968	140	190	05.15-03.24	■
2.0 TDI 4motion (DFHA)	PR 1LA, PR 1LB, discØ 340	Diesel	4WD	1968	140	190	05.15-03.24	■
2.0 TDI 4motion (CUAA)	PR 1LA, PR 1LB, discØ 340	Diesel	4WD	1968	176	240	05.15-11.20	■
PASSAT B8 Variant (3G5, CB5) 08.14-					**Estate (Large family car-D Segment)**			
1.4 TSI (CZCA)	PR 1LA, PR 1LB, discØ 340	Gasolina	FWD	1395	92	125	11.14-11.18	■
1.4 TSI (CZDA)	PR 1LA, PR 1LB, discØ 340	Gasolina	FWD	1395	110	150	11.14-03.24	■
1.4 TSI (CZEA)	PR 1LA, PR 1LB, discØ 340	Gasolina	FWD	1395	110	150	11.14-03.24	■
1.4 TSI 4motion (CZEA)	PR 1LA, PR 1LB, discØ 340	Gasolina	4WD	1395	110	150	02.15-11.18	■
1.8 TSI (CJSA)	PR 1LA, PR 1LB, discØ 340	Gasolina	FWD	1798	132	180	02.15-07.19	■
1.8 TSI (CJSC)	PR 1LA, PR 1LB, discØ 340	Gasolina	FWD	1798	132	180	02.15-07.19	■
2.0 TSI (CHHB)	PR 1LA, PR 1LB, discØ 340	Gasolina	FWD	1984	162	220	08.14-03.24	■
2.0 TSI (CXDA)	PR 1LA, PR 1LB, discØ 340	Gasolina	FWD	1984	162	220	08.14-03.24	■
2.0 TSI 4motion (DNUA)		Gasolina	4WD	1984	200	272	09.18-11.20	■
2.0 TSI 4motion (CJXA)	PR 1LA, PR 1LB, discØ 340	Gasolina	4WD	1984	206	280	05.15-03.24	■
1.6 TDI (DCXA)	PR 1LA, PR 1LB, discØ 340	Diesel	FWD	1598	88	120	08.14-11.20	■
1.6 TDI (DCZA)	PR 1LA, PR 1LB, discØ 340	Diesel	FWD	1598	88	120	08.14-11.20	■
2.0 TDI (CRLB)	PR 1LA, PR 1LB, discØ 340	Diesel	FWD	1968	110	150	11.14-03.24	■
2.0 TDI (DBGA)	PR 1LA, PR 1LB, discØ 340	Diesel	FWD	1968	110	150	11.14-03.24	■
2.0 TDI (DFGA)	PR 1LA, PR 1LB, discØ 340	Diesel	FWD	1968	110	150	11.14-03.24	■
2.0 TDI (DSRA)	PR 1LA, PR 1LB, discØ 340	Diesel	FWD	1968	110	150	11.14-03.24	■
2.0 TDI (DSRB)	PR 1LA, PR 1LB, discØ 340	Diesel	FWD	1968	110	150	11.14-03.24	■
2.0 TDI 4motion (CRLB)	PR 1LA, PR 1LB, discØ 340	Diesel	4WD	1968	110	150	08.14-03.24	■
2.0 TDI 4motion (DFEA)	PR 1LA, PR 1LB, discØ 340	Diesel	4WD	1968	110	150	08.14-03.24	■
2.0 TDI 4motion (DFGA)	PR 1LA, PR 1LB, discØ 340	Diesel	4WD	1968	110	150	08.14-03.24	■

2.0 TDI (CUPA)	PR 1LA, PR 1LB, discØ 340	Diesel	FWD	1968	135	184	07.15-05.16	■
2.0 TDI (DDAA)	PR 1LA, PR 1LB, discØ 340	Diesel	FWD	1968	140	190	11.14-03.24	■
2.0 TDI (DFCA)	PR 1LA, PR 1LB, discØ 340	Diesel	FWD	1968	140	190	11.14-03.24	■
2.0 TDI (DFHA)	PR 1LA, PR 1LB, discØ 340	Diesel	FWD	1968	140	190	11.14-03.24	■
2.0 TDI 4motion (DDAA)	PR 1LA, PR 1LB, discØ 340	Diesel	4WD	1968	140	190	11.14-03.24	■
2.0 TDI 4motion (DFCA)	PR 1LA, PR 1LB, discØ 340	Diesel	4WD	1968	140	190	11.14-03.24	■
2.0 TDI 4motion (DFHA)	PR 1LA, PR 1LB, discØ 340	Diesel	4WD	1968	140	190	11.14-03.24	■
2.0 TDI 4motion (CUAA)	PR 1LA, PR 1LB, discØ 340	Diesel	4WD	1968	176	240	08.14-11.20	■
POLO V (6R1, 6C1) 03.09-							**Hatchback (Supermini car-B Segment)**	
1.8 GTI 230 (DAJA)	PR 1LJ, PR 1LM, discØ 340	Gasolina	FWD	1798	169	230	04.16-10.17	■
SHARAN II (7N1, 7N2) 05.10-							**Box Body/MPV (Large MPV-M1 Segment)**	
1.4 TSI	discØ 314, PR 1LW, PR 1LX	Gasolina	FWD	1390	110	150	05.10-11.15	■
2.0 TSI	PR 1LW, discØ 314	Gasolina	FWD	1984	147	200	12.10-11.15	■
2.0 TDI	PR 1LW, discØ 314	Diesel	FWD	1968	85	116	05.11-11.15	■
2.0 TDI	PR 1LW, discØ 314	Diesel	FWD	1968	100	136	05.10-05.11	■
2.0 TDI	PR 1LW, discØ 314	Diesel	FWD	1968	103	140	05.10-11.15	■
2.0 TDI	PR 1LW, discØ 314	Diesel	FWD	1968	125	170	08.10-01.13	■
SHARAN II (7N1, 7N2) 05.10-							**MPV (Large MPV-M1 Segment)**	
1.4 TSI (CAVA)	discØ 314, PR 1LW, PR 1LX	Gasolina	FWD	1390	110	150	05.10-11.15	■
1.4 TSI (CNWB)	discØ 314, PR 1LW, PR 1LX	Gasolina	FWD	1390	110	150	05.10-11.15	■
1.4 TSI (CTHA)	discØ 314, PR 1LW, PR 1LX	Gasolina	FWD	1390	110	150	05.10-11.15	■
1.4 TSI (CZDA)	PR 1LW, PR 1LX, discØ 314	Gasolina	FWD	1395	110	150	05.15-11.22	■
1.4 TSI (DJKA)	PR 1LW, PR 1LX, discØ 314	Gasolina	FWD	1395	110	150	05.15-11.22	■
1.8 TSI		Gasolina	FWD	1798	118	160	11.11-	■
2.0 TFSI (CCZA)	discØ 314, PR 1LW, PR 1LX	Gasolina	FWD	1984	147	200	12.10-11.15	■
2.0 TSI (DEDA)	PR 1LW, PR 1LX, discØ 314	Gasolina	FWD	1984	162	220	05.15-12.20	■
2.0 TDI (CFFE)	discØ 314, PR 1LW, PR 1LX	Diesel	FWD	1968	85	115	05.11-07.19	■
2.0 TDI (CUVA)	discØ 314, PR 1LW, PR 1LX	Diesel	FWD	1968	85	115	05.11-07.19	■
2.0 TDI (DFLD)	discØ 314, PR 1LW, PR 1LX	Diesel	FWD	1968	85	115	05.11-07.19	■
2.0 TDI (DLTC)	discØ 314, PR 1LW, PR 1LX	Diesel	FWD	1968	85	115	05.11-07.19	■
2.0 TDI	discØ 314, PR 1LW, PR 1LX	Diesel	RWD	1968	100	136	05.11-05.12	■
2.0 TDI (CFFA)		Diesel	FWD	1968	100	136	05.10-11.15	■
2.0 TDI (CFFB)	discØ 314, PR 1LW, PR 1LX	Diesel	FWD	1968	103	140	05.10-11.15	■
2.0 TDI 4motion (CFFB)	discØ 314, PR 1LW, PR 1LX	Diesel	4WD	1968	103	140	05.11-11.15	■
2.0 TDI (CUVC)	PR 1LW, PR 1LX, discØ 314	Diesel	FWD	1968	110	150	05.15-10.20	■
2.0 TDI (DFLA)	PR 1LW, PR 1LX, discØ 314	Diesel	FWD	1968	110	150	05.15-10.20	■
2.0 TDI (DLTA)	PR 1LW, PR 1LX, discØ 314	Diesel	FWD	1968	110	150	05.15-10.20	■
2.0 TDI 4motion (CUVC)	PR 1LW, PR 1LX, discØ 314	Diesel	4WD	1968	110	150	05.15-07.19	■
2.0 TDI 4motion (DFLA)	PR 1LW, PR 1LX, discØ 314	Diesel	4WD	1968	110	150	05.15-07.19	■
2.0 TDI 4motion (DLTA)	PR 1LW, PR 1LX, discØ 314	Diesel	4WD	1968	110	150	05.15-07.19	■
2.0 TDI (CFGB)	discØ 314, PR 1LW, PR 1LX	Diesel	FWD	1968	125	170	05.10-01.13	■
2.0 TDI (CFGC)	PR 1LW, PR 1LX, discØ 314	Diesel	FWD	1968	130	177	01.13-06.22	■
2.0 TDI (DLUB)	PR 1LW, PR 1LX, discØ 314	Diesel	FWD	1968	130	177	01.13-06.22	■
2.0 TDI 4motion (DLUB)		Diesel	4WD	1968	130	177	07.18-10.20	■
2.0 TDI (CUWA)	PR 1LW, PR 1LX, discØ 314	Diesel	FWD	1968	135	184	05.15-07.18	■
2.0 TDI (DFMA)	PR 1LW, PR 1LX, discØ 314	Diesel	FWD	1968	135	184	05.15-07.18	■
2.0 TDI 4motion (DFMA)	PR 1LW, PR 1LX, discØ 314	Diesel	4WD	1968	135	184	05.16-07.18	■
TIGUAN II (AD1) 07.15-							**SUV Van ()**	
TDI 4motion	Eq.V_ ADI, PR 1LA, PR 1LW, discØ 340	Diesel	4WD	1968	140	190	01.16-07.20	■

LISTA DE APLICACIONES - BUYERS GUIDE

TIGUAN II (AD1, AX1) 01.16-								SUV (Compact SUV-J Segment)
1.4 TSI (CZCA)	Eq.V_ ADI, PR 1LA, PR 1LW, discØ 340	Gasolina	FWD	1395	92	125	01.16-03.22	■
1.4 TSI (CZDA)	Eq.V_ ADI, PR 1LA, PR 1LW, discØ 340	Gasolina	FWD	1395	110	150	05.16-03.22	■
1.4 TSI (CZEA)	Eq.V_ ADI, PR 1LA, PR 1LW, discØ 340	Gasolina	FWD	1395	110	150	05.16-03.22	■
1.4 TSI (DJVA)	Eq.V_ ADI, PR 1LA, PR 1LW, discØ 340	Gasolina	FWD	1395	110	150	05.16-03.22	■
1.4 TSI 4motion (CZDA)	Eq.V_ ADI, PR 1LA, PR 1LW, discØ 340	Gasolina	4WD	1395	110	150	05.16-03.22	■
1.4 TSI 4motion (CZEA)	Eq.V_ ADI, PR 1LA, PR 1LW, discØ 340	Gasolina	4WD	1395	110	150	05.16-03.22	■
2.0 TSI 4motion (CZPA)	Eq.V_ AD1, PR 1LA, PR 1LW, discØ 340	Gasolina	4WD	1984	132	180	01.16-04.24	■
2.0 TSI 4motion (DKZA)		Gasolina	4WD	1984	140	190	09.18-11.22	■
2.0 TSI 4motion (DRFA)		Gasolina	4WD	1984	140	190	09.18-11.22	■
2.0 TSI 4motion (CHHB)	Eq.V_ AD1, PR 1LA, PR 1LW, discØ 340	Gasolina	4WD	1984	162	220	06.16-04.24	■
2.0 TSI 4motion (DKTA)		Gasolina	4WD	1984	169	230	09.18-07.20	■
1.6 TDI (DGDB)	Eq.V_ AD1, PR 1LA, PR 1LW, discØ 340	Diesel	FWD	1598	85	115	05.16-06.20	■
2.0 TDI (CYKC)	Eq.V_ ADI, PR 1LA, PR 1LW, discØ 340	Diesel	FWD	1968	81	110	08.16-07.20	■
2.0 TDI (DFGC)	Eq.V_ ADI, PR 1LA, PR 1LW, discØ 340	Diesel	FWD	1968	85	115	05.16-07.19	■
2.0 TDI 4motion	Eq.V_ ADI, PR 1LA, PR 1LW, discØ 340	Diesel	4WD	1968	105	143	06.16-07.20	■
2.0 TDI (DFGA)	Eq.V_ ADI, PR 1LA, PR 1LW, discØ 340	Diesel	FWD	1968	110	150	01.16-04.24	■
2.0 TDI (DTSA)	Eq.V_ ADI, PR 1LA, PR 1LW, discØ 340	Diesel	FWD	1968	110	150	01.16-04.24	■
2.0 TDI (DTSB)	Eq.V_ ADI, PR 1LA, PR 1LW, discØ 340	Diesel	FWD	1968	110	150	01.16-04.24	■
2.0 TDI 4motion (DBGC)	Eq.V_ ADI, PR 1LA, PR 1LW, discØ 340	Diesel	4WD	1968	110	150	01.16-04.24	■
2.0 TDI 4motion (DFGA)	Eq.V_ ADI, PR 1LA, PR 1LW, discØ 340	Diesel	4WD	1968	110	150	01.16-04.24	■
2.0 TDI 4motion (DTSA)	Eq.V_ ADI, PR 1LA, PR 1LW, discØ 340	Diesel	4WD	1968	110	150	01.16-04.24	■
2.0 TDI 4motion (DTSB)	Eq.V_ ADI, PR 1LA, PR 1LW, discØ 340	Diesel	4WD	1968	110	150	01.16-04.24	■
2.0 TDI 4motion (CRGB)	Eq.V_ ADI, PR 1LA, PR 1LW, discØ 340	Diesel	4WD	1968	130	177	08.16-07.20	■
2.0 TDI 4motion (DFHA)	Eq.V_ ADI, PR 1LA, PR 1LW, discØ 340	Diesel	4WD	1968	140	190	04.16-07.20	■
2.0 TDI 4motion (CUAA)	Eq.V_ ADI, PR 1LA, PR 1LW, discØ 340	Diesel	4WD	1968	176	240	05.16-07.20	■

TIGUAN ALLSPACE (BW2, BJ2) 03.17-								SUV (Compact SUV-J Segment)
1.4 TSI (CZDA)	PR 1LA, PR 1LW, discØ 340	Gasolina	FWD	1395	110	150	06.17-	■
1.4 TSI (CZEA)	PR 1LA, PR 1LW, discØ 340	Gasolina	FWD	1395	110	150	06.17-	■
1.5 TSI (DADA)		Gasolina	FWD	1498	110	150	09.18-	■
1.5 TSI (DPCA)		Gasolina	FWD	1498	110	150	09.18-	■
2.0 TSI 4motion (DGVA)	PR 1LW, discØ 314 | PR 1LA, discØ 340	Gasolina	4WD	1984	132	180	03.17-	■
2.0 TSI (DGUA)	PR 1LA, PR 1LW	Gasolina	FWD	1984	137	186	04.17-	■
2.0 TSI 4motion (DGUA)	PR 1LA, PR 1LW	Gasolina	4WD	1984	137	186	04.17-	■
2.0 TSI 4motion (DNLA)		Gasolina	4WD	1984	140	190	09.18-	■
2.0 TSI 4motion (CXDA)	PR 1LW, discØ 314 | PR 1LA, discØ 340	Gasolina	4WD	1984	162	220	07.17-	■
2.0 TSI 4motion (DNJA)	PR 1LW, discØ 314 | PR 1LA, discØ 340	Gasolina	4WD	1984	162	220	07.17-	■
2.0 TSI 4motion (DKTA)		Gasolina	4WD	1984	169	230	09.18-07.20	■
1.4 TSI E100 Flex (CWLA)	PR 1LA, PR 1LW, discØ 340	Gasol./Etanol	FWD	1395	110	150	07.17-	■

2.0 TDI (DFGA)	PR 1LA, PR 1LW, discØ 340	Diesel	FWD	1968	110	150	06.17-	■
2.0 TDI 4motion (DBGC)	PR 1LA, PR 1LW, discØ 340	Diesel	4WD	1968	110	150	06.17-	■
2.0 TDI 4motion (DFGA)	PR 1LA, PR 1LW, discØ 340	Diesel	4WD	1968	110	150	06.17-	■
2.0 TDI 4motion (DFHA)	PR 1LA, PR 1LW, discØ 340	Diesel	4WD	1968	140	190	06.17-07.21	■
2.0 TDI 4motion (CUAA)	PR 1LA, PR 1LW, discØ 340	Diesel	4WD	1968	176	240	06.17-09.20	■
T-ROC (AC7, AC8) 12.19-							**Convertible (Mini SUV-J Segment)**	
1.0 TSI	PR 1LQ	Gasolina	FWD	999	81	110	09.20-	■
T-ROC (A11, D11) 07.17-							**SUV (Mini SUV-J Segment)**	
1.0 TSI (CHZJ)	PR 1LQ	Gasolina	FWD	999	85	116	07.17-	■
1.0 TSI (DKRF)	PR 1LQ	Gasolina	FWD	999	85	116	07.17-	■
1.0 TSI 4motion	PR 1LQ	Gasolina	4WD	999	85	115	01.19-	■
1.5 TSI (DADA)	PR 1LQ	Gasolina	FWD	1498	110	150	11.17-	■
1.5 TSI (DPCA)	PR 1LQ	Gasolina	FWD	1498	110	150	11.17-	■
2.0 TSI 4motion (CZPB)	PR 1LQ	Gasolina	4WD	1984	140	190	07.17-	■
2.0 TSI 4motion (DKZA)	PR 1LQ	Gasolina	4WD	1984	140	190	07.17-	■
2.0 R 4motion (DNUE)	PR 1LQ	Gasolina	4WD	1984	221	300	09.19-	■
1.6 TDI (DGTE)	PR 1LQ	Diesel	FWD	1598	85	115	03.18-06.21	■
2.0 TDI SCR	PR 1LQ	Diesel	FWD	1968	85	116	11.20-	■
2.0 TDI (DFFA)	PR 1LQ	Diesel	FWD	1968	110	150	03.18-	■
2.0 TDI 4motion (DFFA)	PR 1LQ	Diesel	4WD	1968	110	150	09.17-	■
2.0 TDI 4motion (DFHA)	PR 1LQ	Diesel	4WD	1968	140	190	07.19-06.21	■
VW (SVW)								
TIGUAN L (0T1, 0T3) 01.17-							**SUV (Compact SUV-J Segment)**	
330TSi	PR 1LA, PR 1LW, discØ 340	Gasolina	FWD	1798	132	180	01.17-	■
Tsi 330	PR 1LA, PR 1LW, discØ 340	Gasolina	FWD	1798	132	180	04.17-	■
330TSi	PR 1LA, PR 1LW, discØ 340	Gasolina	FWD	1984	137	186	01.18-	■
380 Tsi 4motion	PR 1LA, PR 1LW, discØ 340	Gasolina	4WD	1984	162	220	01.17-	■
380 Tsi 4motion	PR 1LA, PR 1LW, discØ 340	Gasolina	4WD	1984	162	220	06.19-	■
14.4 430 PHEV		Gasol./eléc.	FWD	1395	110	150	11.18-	■
TIGUAN X (0T2, 0T4) 11.20-							**SUV (Compact SUV-J Segment)**	
330TSi (DPLA)	PR 1LA, PR 1LW, discØ 340	Gasolina	FWD	1984	137	186	11.20-	■
380 Tsi 4motion (DKXA)	PR 1LA, PR 1LW, discØ 340	Gasolina	4WD	1984	162	220	11.20-	■