LISTA DE APLICACIONES - BUYERS GUIDE

141044

8 424073 016904

Qty: 639 Weight: 2.440

O.E.M.	MAKE
04465-36010	TOYOTA
04465-36020	TOYOTA
04465-36080	TOYOTA
04465-36090	TOYOTA
04465-37010	TOYOTA
04465-37030	TOYOTA
04465-37100	TOYOTA
04465-37250	TOYOTA
04465-YZZE6	TOYOTA
04491-36030	TOYOTA
04491-36070	TOYOTA
V9115-0013	TOYOTA
V9118-1049	TOYOTA
V9118-A049	TOYOTA
V9118-A079	TOYOTA

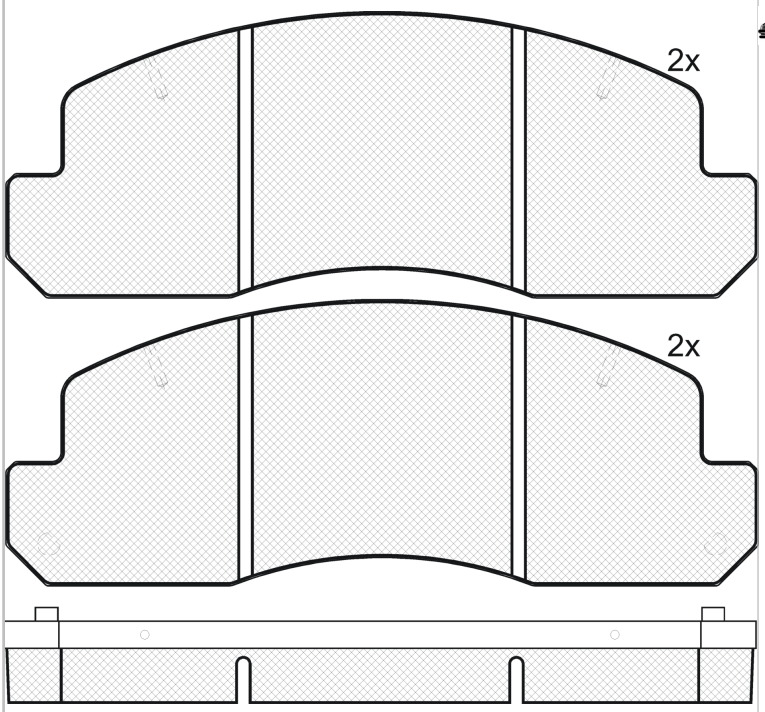

141044

Sumitomo

166.45x63.35x18

WVA	FMSI
23306	D1550-8759
29296	
29297	

MAKE
TOYOTA

Front / Rear

			Trac.	CC	Kw	CV		
TOYOTA								
COASTER (_B1_, _U1_) 08.77-04.82							**Bus (Minibus-M2-Segment)**	
2.0 (RB10)		Gasolina	RWD	1994	64	87	08.77-04.82	■
2.4 (RB13)		Gasolina	RWD	2367	72	98	08.77-04.82	■
3.2 D (BB11)		Diesel	RWD	3197	56	76	08.77-04.82	■
COASTER II (_B2_, _B3_) 05.82-01.93							**Bus (Minibus-M2-Segment)**	
2.4 (RB20)		Gasolina	RWD	2367	72	98	05.82-09.89	■
3.4 BB 21, 26V	01/82-	Gasolina	FWD	3395			05.82-	■
4.2 D (HZB30, HZB31, HZB36) (1H-Z)	-12/92	Diesel	RWD	4164	59	80	10.87-01.93	■
4.2 D (HZB30_, HZB36_, HZB31_, HZB30R, HZB31R, HZB36R) (1H-Z)	-12/92	Diesel	RWD	4164	92	125	10.87-01.93	■
COASTER III (_B4_, _B5_) 01.90-							**Bus (Minibus-M2-Segment)**	
4.2 D (HZB50, HZB56V, HZB46V) (1H-Z)		Diesel	RWD	4164	96	131	01.93-08.08	■
COSTA 01.86-							**Van (LCVs-N1 Segment)**	
All models	01/86-	Gasolina	FWD				01.86-	■
DYNA (KD_, LY_, _Y2_, _U3_, _U4_, _U6_, _U8_) 05.99-							**Platform/Chassis (LCVs-N1 Segment)**	
4.0 D4d 4WD (XZU675, XZU685, XZU695, XZU775, XZU368) (N04C-UL)		Diesel	4WD	4009	110	150	05.11-	■
4.0 D4d 4WD (XZU675, XZU685, XZU695, XZU775, XZU368) (N04C-UP)		Diesel	4WD	4009	110	150	05.11-	■
DYNA 200 01.85-05.95							**Platform/Chassis (LCVs-N1 Segment)**	
2.2 (YU210) (4Y)		Gasolina	RWD	2237	69	94	10.93-05.95	■
3.0 D (BU6_, BU76, BU84) (11B)	01/91-	Diesel	RWD	2977	75	102	01.85-05.95	■
3.4 D (BU100, BU110, BU140) (3B)		Diesel	RWD	3431	66	90	06.95-05.99	■

3.4 D (BU6_, BU8_, BU7_, BU68) (3B)		Diesel	RWD	3431	66	90	10.89-05.95	■
3.7 D (BU101, BU141, BU211, BU221) (14B)		Diesel	RWD	3661	71	97	06.95-12.02	■
3.7 D (BU66, BU87, BU88, BU91, BU67) (14B)	01/91-	Diesel	RWD	3661	71	97	08.88-05.95	■
4.1 Di (BU102, BU112, BU122, BU132, BU142, BU162, BU172,... (15B-F)	Type BU142/BU212	Diesel	RWD	4104	92	125	06.95-05.99	■
4.1 Di (BU102, BU112, BU122, BU132, BU142, BU162, BU172,... (15B-FT)	Type BU142/BU212	Diesel	RWD	4104	92	125	06.95-05.99	■
DYNA 400 (BU_, XZU_) 10.00-12.06								**Platform/Chassis (LCVs-N1 Segment)**
4.6 D (XZU402, XZU412, XZU422) (S05C)		Diesel	RWD	4613	88	120	10.00-09.06	■
OPTIMO 01.86-								**Bus (Minibus-M2-Segment)**
All models	01/86-	Gasolina	FWD				01.86-	■